IRA SYSTEMS

instruction manual for

IRASCOPE®

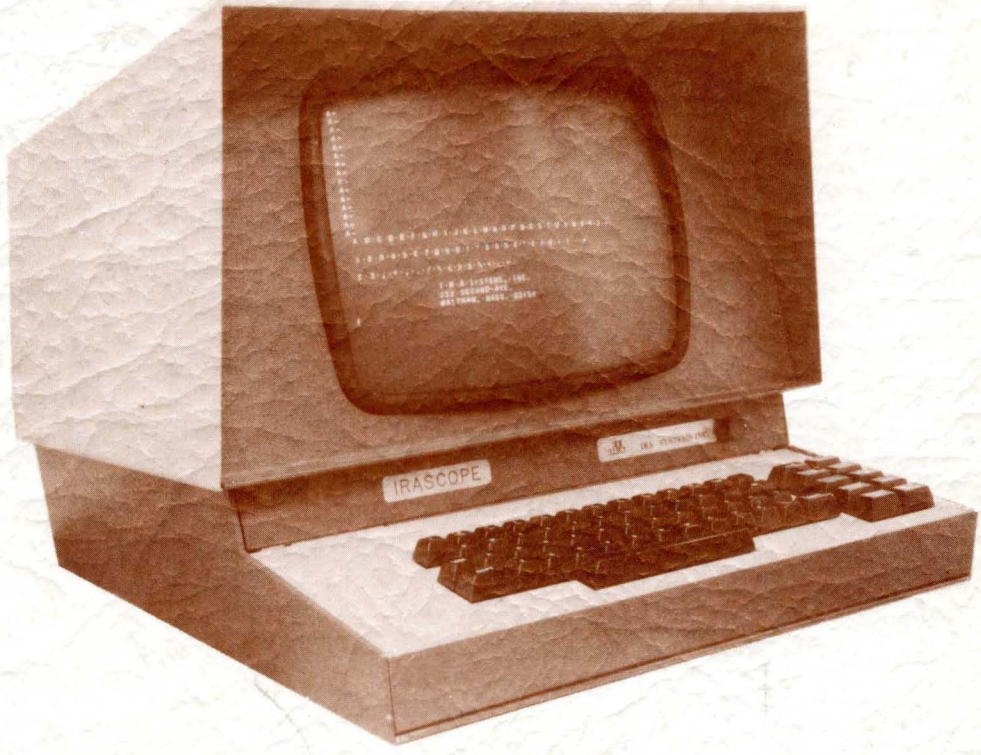

IRASCOPE®

instruction manual

May 1969

© Copyright 1969

All rights reserved. Contents of this publication may not be reproduced in any form without permission of the copyright owner.

I. R. A. Systems, Inc.
332 Second Avenue, Waltham, Massachusetts 02154
(617) 891-7300 TWX 710-324-6699

® REGD. T.M.

FOREWORD

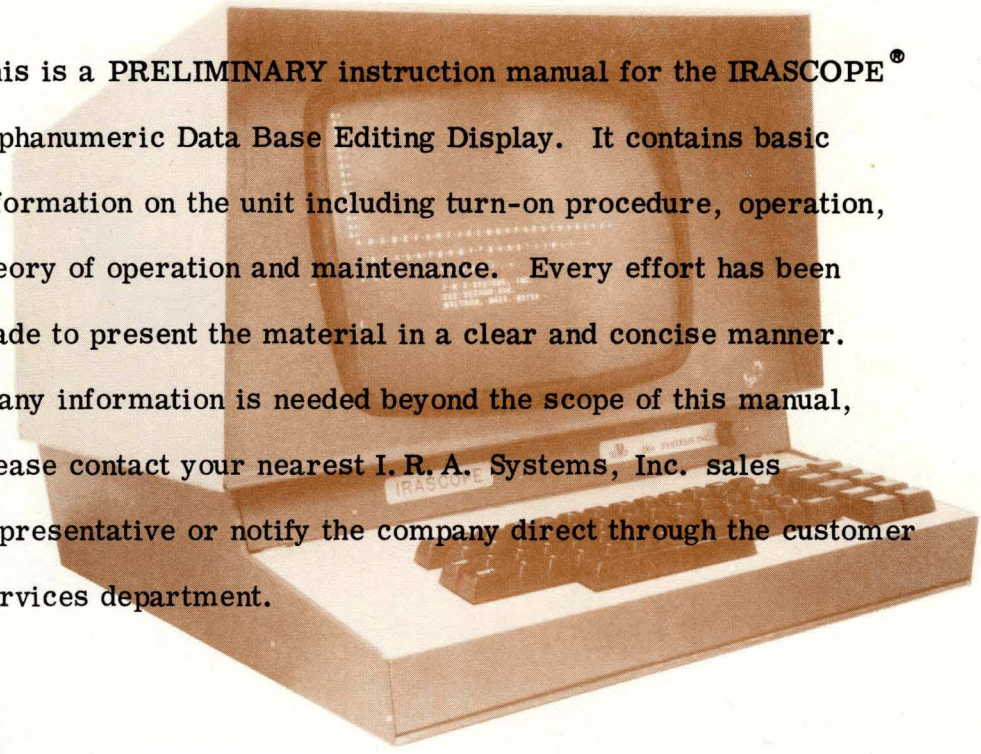

This is a PRELIMINARY instruction manual for the IRASCOPE® Alphanumeric Data Base Editing Display. It contains basic information on the unit including turn-on procedure, operation, theory of operation and maintenance. Every effort has been made to present the material in a clear and concise manner. If any information is needed beyond the scope of this manual, please contact your nearest I. R. A. Systems, Inc. sales representative or notify the company direct through the customer services department.

WARRANTY

I. R. A. Systems, Inc. warrants the product(s) covered hereby to be free from defects in material and workmanship. I. R. A. Systems' liability under this warranty shall be limited to repairing, or furnishing parts, to replace, F. O. B. point of manufacture, any assemblies, subassemblies, or wiring manufactured by I. R. A. Systems which fail because of defective material or workmanship within twelve months from date of shipment of said product(s). Written notice of such defects must be given to I. R. A. Systems for verification when first discovered, and the materials or parts alleged to be defective shall be returned to I. R. A. Systems if requested. Failure to comply with the foregoing shall render this warranty null and void. I. R. A. Systems may use improved designs of the parts to be replaced. The making of any repairs or replacements by I. R. A. Systems shall not thereby extend the term of the original warranty beyond the original twelve months period set forth above. No other warranties, expressed or implied are made by or shall be binding upon I. R. A. Systems with respect to any part or product except the warranty expressly contained herein. I. R. A. Systems does not guaranty the quality of material, parts or products specified or furnished by the buyer, or by other parties designated or not designated by the buyer, if those parts, products or materials are not manufactured by I. R. A. Systems. I. R. A. Systems shall not be liable for transportation or installation charges, for expenses of buyer for repairs or replacements, or for damages from delay or loss of use of for other direct, indirect, or consequential damages of any kind suffered by the buyer. This warranty shall not apply to any I. R. A. Systems product or parts which shall have been repaired or altered by others, or to any defect due, in whole or in part, to misuse, negligence, accident or any cause other than normal and reasonable use, nor shall it apply beyond the normal span of life of any non-IRA materials, parts or products whose normal span of life is shorter than the warranty period stated herein. If any modification or repairs are made to any such product, material or part of I. R. A. Systems, Inc. without prior written approval of the factory, the warranty set forth herein shall become null and void.

I.R.A. SYSTEMS, INC.

AN AFFILIATE OF USM CORPORATION

332 SECOND AVENUE,
WALTHAM, MASSACHUSETTS 02154
(617) 891-7300

CONTENTS

1 DESCRIPTION

1.1 General 1-1
1.2 Specifications 1-1

2 OPERATION

2.1 General 2-1
2.2 Cursor 2-1
2.3 Keyboard 2-2
2.3.1 Function Keys 2-2
2.4 Functional 2-2
2.5 Editing 2-3

3 THEORY OF OPERATION

3.1 Introduction 3-1
3.2 Deflection Circuits 3-1
3.3 Character Generator 3-2
3.4 Edit Logic 3-3
3.5 Memory 3-4
3.6 Basic Interface 3-5
3.7 Timing and Control 3-6

4 MAINTENANCE

4.1 General 4-1
4.1.1 Cleaning 4-1
4.1.2 Visual Inspection 4-1
4.2 4-1
4.2.1 Video Amplifier 4-2
4.2.2 Character Generator 4-2
4.2.3 Deflection Amplifiers 4-5
4.2.4 Y Minor Deflection Amplifiers 4-5
4.2.5 Logic Rack Assembly 4-7
4.2.6 Delay Line Length 4-8

5 TROUBLESHOOTING 5-1

APPENDIX A IRASCOPE ASCII CODE A-1

ILLUSTRATIONS

2-1	Interface Capabilities	2-2
2-2	Internal Data Flow	2-3
2-3	Insert Character Function	2-4
2-4	Insert Function	2-5
2-5	Delete Function	2-5
3-1	Deflection Circuits	3-1
3-2	Character Generator Circuits	3-2
3-3	Edit Logic Circuits	3-3
3-4	Memory Circuits	3-4
3-5	Interface Circuits	3-5
3-6	Timing and Control Circuits	3-6
4-1	Video Amplifier (Top Center) Y Minor Deflection Amplifier (Bottom Center)	4-3
4-2	Character Generator	4-3
4-3	X & Y Deflection Amplifiers	4-6
4-4	Logic Rack Assembly	4-6
4-5	Standard Monoscope Font	4-9
4-6	Logic Rack Assembly (Wiring Side)	4-9

SECTION 1

DESCRIPTION

1.1 GENERAL

The I. R. A. Systems IRASCOPE® is a CRT alphanumeric Data Base Editing Display containing a high resolution monoscope character generator. A standard typewriter keyboard style is provided with ten control function keys permitting a high degree of flexibility of control of the message format with immediate visible results. It provides a rapid method of communication which can be selectively transmitted to a remote unit, used as a "stand-alone" unit (all functions performed internal to the unit itself), or used as a Data Processor Peripheral.

1.2 SPECIFICATIONS

The following specifications are given in Table 1-1 for the IRASCOPE® Model DBEC-1000/AN as a stand alone desk top console without any peripherals.

All functions may start at keyboard cursor location or at externally selected memory location.

The keyboard control circuits, analog circuits, interface display and power supplies are all located within the desk top cabinet.

Various sections of this unit will swing out or can be easily removed when unlocked for ease of maintenance.

TABLE 1-1

MODEL DBEC-1000/AN SPECIFICATIONS

PHYSICAL	Height - 15 in., Width - 18 in., Length - 27 in., Weight - 100 lbs. approx.
INPUT POWER	115V $\pm$ 10%, 60 Hz, approximately 250 watts
CRT SIZE	12 inch diagonal (approx. 7 in. by 9.5 in. viewing area)
CRT FACEPLATE	Gray - approx. 50% Transmission (bonded on safety plate etched for anti-glare)
PHOSPHOR	P31 (Green)
BRIGHTNESS	30 foot lamberts minimum
REFRESH RATE	60 Hertz
CHARACTERS PER LINE	Horizontally oriented CRT - 64 nominal- Field adjustable from 40 to 80
LINES PER PAGE	Horizontally oriented CRT - Hard wired 32 maximum. Field analog adjustment of line spacing and character height to fill screen with fewer lines
MAXIMUM CHARACTER POSITIONS	Over 2,000
MAXIMUM DISPLAYED CHARACTERS	1,200 less 6 characters per retrace (carriage return or maximum line)
CHARACTER GENERATION	High Resolution Monoscope
CHARACTER HEIGHT	0.13 inches nominal
CHARACTER WIDTH	0.10 inches nominal
CHARACTER TO CHARACTER SPACE	0.03 inches nominal
LINE TO LINE SPACE	0.07 inches nominal
CHARACTER WRITE AND POSITION TIME	13.9 microseconds

TABLE 1-1 (Continued)

MEMORY TYPE	Recirculating Magnetostrictive Delay line 8.326 milliseconds long
MEMORY CAPACITY	1,200 six bit characters
CHARACTER REPERTOIRE	64 characters including space and blank
KEYBOARD	Integral permanent magnet operated reed switch
ALPHANUMERIC KEYS	45 Plus Space coded in a modified ASCII six bit sub set
FUNCTION KEYS	13 I/O plus edit functions
CARRIAGE RETURN	Inserts the CR symbol (left arrow) and follows it with 6 blank spaces. This symbol causes the horizontal sweep to retrace and vertical to be incremented one line.
ENTER	Used with some external devices as an interrupt.
EOM	Inserts the EOM symbol (up arrow) which is interpreted by the I/O logic as the termination of a message.
XMIT	Transmit initiates a transfer of information on the screen to an external device. Transmission will be from the cursor location to the next EOM symbol.
CLEAR	Clears memory and returns cursor to home.
RESET	Returns cursor to home.
ADVANCE SPACE	Moves cursor forward.
BACK SPACE	Moves cursor backward
ADVANCE LINE	Moves cursor to beginning of next line.
ERASE LINE	Enters blanks from cursor location to next CR.
INSERT CHARACTER	Inserts a blank and repacks memory position cursor to the inserted location.

TABLE 1-1 (Continued)

INSERT	Inserts a blank and repacks memory.
DELETE	Deletes character at cursor location and repacks memory.
I/O	Parallel or serial
I/O RATE	Serial - Standard - 1200 baud Parallel - Maximum 72 KC (one character every 13.9 microseconds. If this time is exceeded another 16.7 milliseconds is required to resume this rate).
I/O CODES	Modified 7 Bit ASCII

FUNCTIONS WHICH MAY BE PERFORMED UNDER EXTERNAL COMMAND:

INSERT

DELETE

ERASE LINE

RESET VISIBLE CURSOR

CLEAR

ADVANCE LINE

ADVANCE SPACE

READ MEMORY

TYPE

SECTION 2

OPERATION

2.1 GENERAL

After the unit has been placed in location and input power requirements have been met, the unit may be turned on by the power/ intensity control switch located above the keyboard. This switch allows the operator to control the intensity to a desired level. Following turn-on, depress the RESET and CLEAR keys. This will bring the cursor to the home position (upper left corner of screen) and clear memory. From this condition characters may be inserted into memory and thereby displayed. At this time the display intensity level may be set by the operator.

2.2 CURSOR

All but one of the operations from the keyboard occur in the position designated by the cursor. The cursor appears as a vertical line one character high and horizontally centered at the character position it is indicating. If there is no character at that position, the cursor blinks at a nominal six Hertz rate. If there is a character in that position, the cursor and the character will appear alternately at the six Hertz rate.

2.3 KEYBOARD

The keyboard is organized in the style of a standard typewriter. Additional keys located on the right side of the keyboard initiate the various functions of control within IRASCOPE®.

2.3.1 FUNCTION KEYS

Four of the function keys serve to allow the operator to position the cursor at any desired location on the screen. These keys are:

RESET	Depression of this key will return the cursor to the upper left hand corner of the display screen, regardless of the previous cursor position.
ADVANCE SPACE	Depression advances the cursor one character position. If this key is held down, the cursor will continue to advance six spaces per second.
ADVANCE LINE	When this key is depressed, the cursor will move to the first character space on the following line. If this key is held down, the cursor will continue to move at the rate of six lines per second.
BACK SPACE	This key has the same effect as ADVANCE SPACE, except in the reverse direction.

The single operation, which is independent of cursor location, is CLEAR. Striking this key results in the erasure of all information on the screen. After this operation, the cursor is left at the upper left corner of the screen.

2.4 FUNCTIONAL

The IRASCOPE® will serve as an interface between the operator and various storage devices such as computers, magnetic tape drivers, line printers, paper tape punch, or modems, or even another IRASCOPE® (see Figure 2-1).

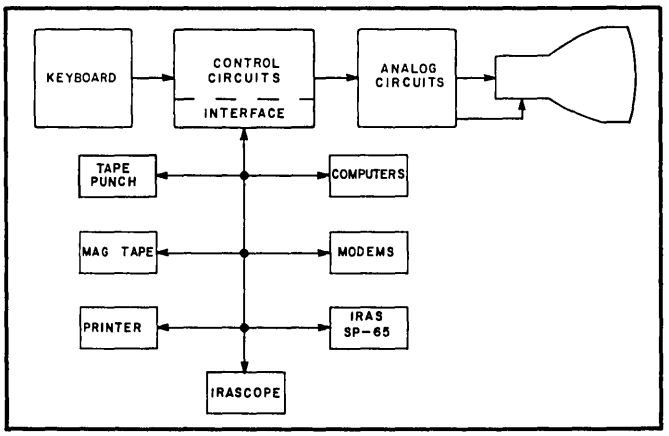

Figure 2-1. Interface Capabilities

The internal functions of the IRASCOPE® are carried on in seven major areas. They are: CRT deflection, CRT symbol presentation (video amplifier and CRT biasing), Character Generator, Editing (keyboard and Edit logic), Memory, Interface, and Timing and Control. Major data paths are illustrated in Figure 2-2.

Data stored in memory is used to govern the deflection circuits and to sequentially select the character to be generated by the generator for display. Thus the screen presentation reflects the contents of memory. Keyboard operations are used to modify the contents of memory. The keyboard data keys transmit only to the memory bus through the Edit logic and the memory control.

Transmission of the selected portion of the message block (a message block is that which is contained from the cursor to the EOM) will begin from the cursor to the end of the block (terminated by the EOM).

External equipment may alter the contents of selected portions of memory. The display immediately reflects that portion of memory which is being altered.

2.5 EDITING

Five operations are available for use in editing. These are:

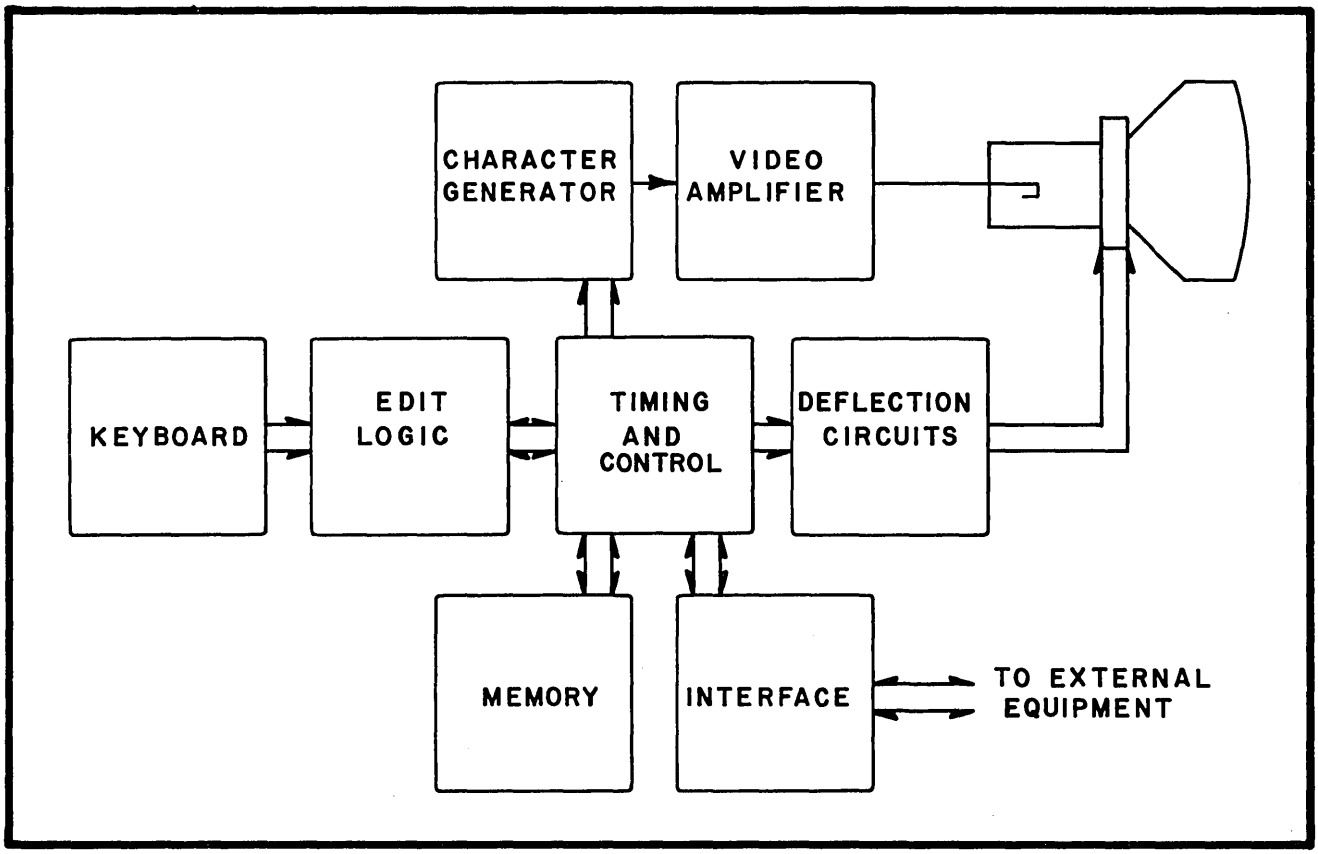

Figure 2-2. Internal Data Flow

TYPE — The alphanumeric keyboard is used in the same manner as that of an electric typewriter, which it closely resembles. Striking a key results in the replacement of the character indicated by the cursor by the character on the depressed key. After each type operation, the cursor will advance one character space, thus, allowing normal typewriter action. Each line should be terminated by depressing the carriage return (CR) key. This will type a left arrow and advance the cursor to the first character space in the next line. It should be noted that the space bar is a "type" function and will, therefore, replace any character at the cursor location with a space.

ERASE LINE — When this key is depressed, every character from the cursor location to the next carriage return character will be replaced by blank characters. The carriage return character is not disturbed and the cursor is left on the carriage return character.

INSERT CHARACTER — Striking this key results in a blank space immediately following the cursor location. All information following the cursor location is shifted one character space down, and the cursor is advanced one space. Thus to insert a character in a word (see Figure 2-3), the cursor should be moved to the character preceding the desired location. The INSERT CHARACTER key is depressed inserting a space with the cursor in it. Then, the desired character is typed.

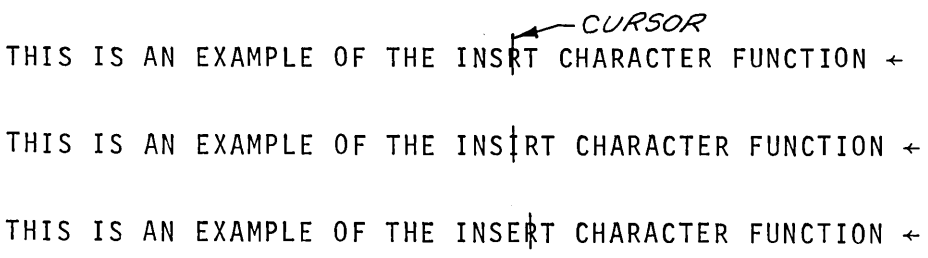

Figure 2-3. Insert Character Function

INSERT — The function of this key is similar to the INSERT CHARACTER with two exceptions. The cursor does not move when this key is depressed, and if this key is held down, its function is repeated at a six Hertz rate. This key is more useful for inserting an entire word or phase. As an example, see Figure 2-4. It is desired to get from line one to line four. First, the cursor is positioned as shown in line one. Then, the INSERT key is held down while three spaces are inserted, as shown on line two. ADVANCE SPACE or the space bar is struck one, giving line three. Then, the desired word is typed normally, resulting in line four.

DELETE — When this key is depressed, the character indicated by the cursor is eliminated and all information following is advanced one space. Figure 2-5 illustrates the deletion of a word with four delete depressions. If this key is held down, deletions will be repeated at the rate of six per second.

```
THIS IS AN EXAMPLE OF|INSERT FUNCTION ←

THIS IS AN EXAMPLE OF|  INSERT FUNCTION ←

THIS IS AN EXAMPLE OF|   INSERT FUNCTION ←

THIS IS AN EXAMPLE OF THE INSERT FUNCTION ←
```

Figure 2.4 Insert Function

```
THIS IS AN EXAMPLE OF|THE DELETE FUNCTION ←

THIS IS AN EXAMPLE OF|THE DELETE FUNCTION ←

THIS IS AN EXAMPLE OFHE DELETE FUNCTION ←

THIS IS AN EXAMPLE OFE DELETE FUNCTION ←

THIS IS AN EXAMPLE OF|DELETE FUNCTION ←
```

Figure 2-5. Delete Function

SECTION 3

THEORY OF OPERATION

3.1 INTRODUCTION

This section of the manual contains a description of the circuitry used in this system. The following paragraphs are an explanation of the subassemblies comprising the system.

3.2 DEFLECTION CIRCUITS (See Figure 3-1)

Decoding of a carriage return symbol on the memory bus triggers the sweep gate generator. This returns the horizontal sweep to zero on the left hand edge of the display and increments the line counter one line. If the sweep generator is allowed to go beyond a given level without a carriage return and end-of-line pulse is generated which has the same effect as a decoded carriage return on the deflection circuits.

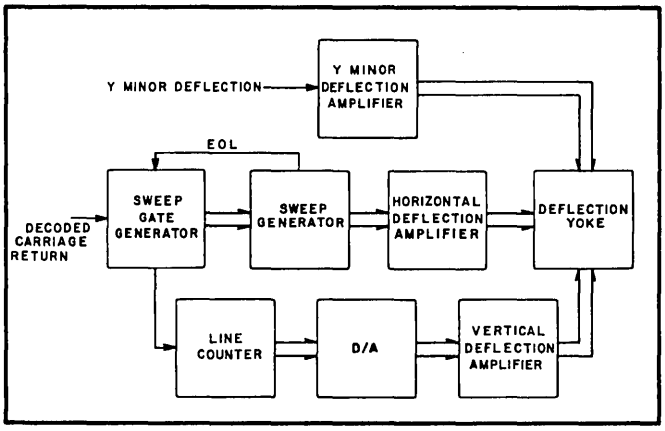

Figure 3-1. Deflection Circuits

The main deflection circuits are DC coupled thus allowing the uneven line lengths without off-centering. The Y minor deflection amplifier drives a resonant circuit consisting of the minor deflection coil and external capacitors and provides the vertical scan for character reproduction.

3.3 CHARACTER GENERATOR

(See Figure 3-2)

Characters are generated with a monoscope. A monoscope consists of a precision electron gun structure focused on a target. The symbols to be generated are printed on the target in an eight by eight array with an ink which has radically different secondary emission characteristics from the target background. A connection brought from the target may be used to detect a signal variation when the electron beam is passed from the target area to ink and back to target. In operation the character code is converted to X and Y analog deflection voltages to position the beam to the symbol to be generated. A linear X ramp and a sinisoidal Y excursion results in a small raster that scans the desired symbol. When the correct phase relationships between the monoscope scan and the display CRT scan are maintained and the target output is used to determine blanked and unblanked times the symbol printed on the monoscope is reproduced on the display CRT. In order to prevent inordinate use of a single area of the target a blank charcter is decoded and the beam is moved completely off the target. The video preamplifier is used to amplify the signal to a level which may feasibly transmit some distance to the main video amplifier.

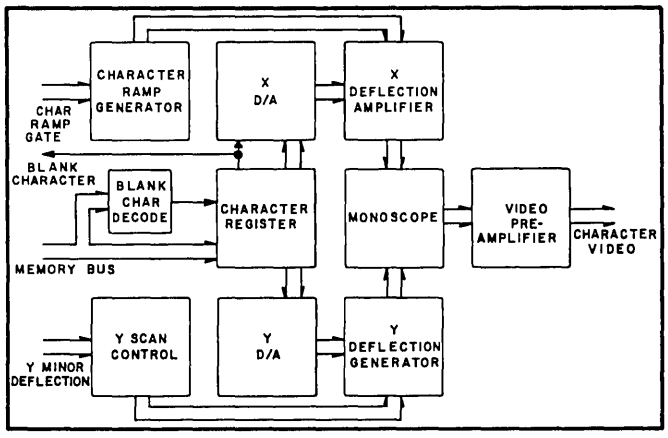

Figure 3-2. Character Generator Circuits

3.4 EDIT LOGIC (See Figure 3-3)

In the Edit mode instructions are received from the keyboard in the form of a switch closure. This is encoded with a diode matrix into a 12 bit word consisting of four fields. Two bits determine whether the function can be performed in one memory cycle or what must be done in a priming cycle. Two bits determine cursor action - increment, decrement, clear, or no action. Five bits determine the major function to be performed and the three remaining bits are used to determine what will terminate the major function.

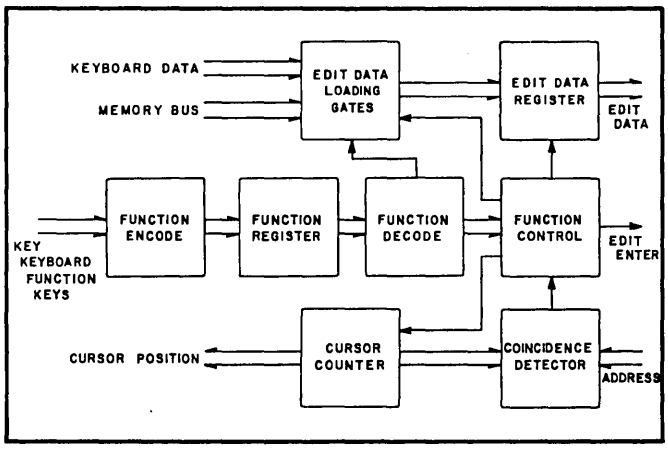

Figure 3-3. Edit Logic Circuits

This word is entered into the Function Register where it is retained until Function Control determines that action is completed. The decoded function register output is then used to control the edit data loading gate, cursor counter, and the function termination. All edit actions are initiated by the detection of coincidence between the cursor counter and the address. This coincidence also is used to generate the visible cursor on the screen. From the viewpoint of the operator whatever action he takes is initiated at the cursor location and terminates at the appropriate location.

Description of three operations will serve to illustrate the Edit operation. First we will follow a character entry from the keyboard. Cycle control is 00 indicating it can be completed in one cycle. Cursor Control is 11 indicating the cursor counter is to be incremented. Major function is 00101 indicating keyboard entry and the terminal is 000 indicating it is to occur at only one character location. This word is loaded into the function register and the edit data loading gates are set to load from keyboard data. At coincidence between cursor counter and address, the keyboard data is loaded into the Edit Data Register and Edit Enter is produced. Assuming it is a legal entry this will enter the desired code into this memory location. After coincidence the cursor counter is incremented one count and the function register is cleared.

From the operator's viewpoint key depression placed the desired character at his cursor location and the cursor moved forward one character space.

Secondly, in order to see a repeated function we will follow an Erase Line operation. Cycle control is still 00 indicating it may be completed in a single memory cycle. Cursor control is again 11 indicating the cursor is then incremented. Major function is now 00100 indicating the major function will be to enter blank characters and the termination is 010 indicating the repetition is to stop at the next decoded carriage return symbol. The Edit Data Register loading gates are set to load all zeroes and, upon coincidence or cursor counter and Address, the function is performed once per character location until the carriage return character is decoded. From the operator's viewpoint the result is a replacement of all characters between his cursor location and the next carriage return symbol with blank spaces.

The third entry that deserves some explanation is the set tab function. Except for major function this is similar to keyboard character entry. However, the Edit Data loading gates are set, not to load keyboard data but to load the data on the memory bus except for the single appropriate bit. Thus this memory location has the character reentered except for the tab bit which will be one regardless of its previous state. These three entries illustrate the major characteristics of the Edit Logic.

3.5 MEMORY (See Figure 3-4)

Under normal circumstances stored data circulates through the delay line and over path 1 thus going through the I/O Register once each full cycle. Data is re-clocked upon each entry into the line. This, of course, forms an "endless belt" which has no intrinsic start point. Therefore the start location is defined as the character in the I/O Register at coincidence of address zero of the address counter and character clock. Data modification is made by parallel entry into the I/O

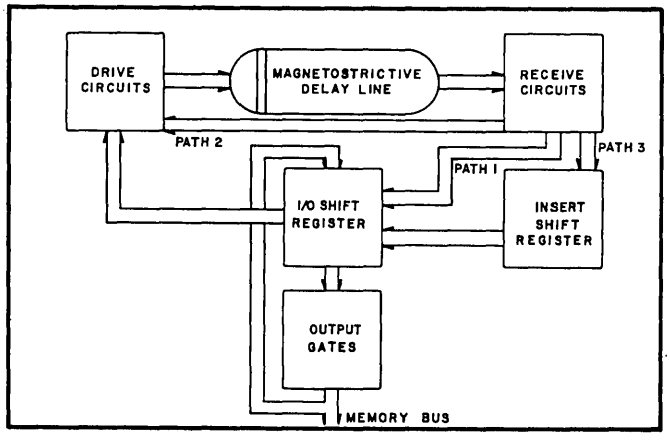

Figure 3-4. Memory Circuits

register at the time that the character to be modified is in the register. Insert and delete commands are implemented by causing the data to follow respectively path 3 and path 2 rather than path 1 from the time the desired location is in the I/O Register until the end of that memory cycle.

3.6 BASIC INTERFACE (See Figure 3-5)

While there will be many interfaces designed to connect the IRASCOPE® with various external equipments the basic portion which interacts with the rest of the display will remain essentially the same. The Interface Counter performs the same function for Interface entry as the Cursor Counter does for the edit logic - that is entry is made or memory is read at the time that the Address Counter is coincident with the Interface Counter. The major difference occurs in the positioning of the interface counter. Under normal circumstances the Interface Counter will be effectively locked to the Cursor Counter. Any entry or transmission from or to the interface will, then, normally start at the cursor location. The interface operation always terminates at a decoded EOM or at the end of memory. Corresponding to the Cursor Control the Interface Counter is always incremented one character position per operation. Upon receipt of the appropriate control word from the external equipment the incoming data will be regarded as the address at which the interface operation is to start. The operation will then start from this location.

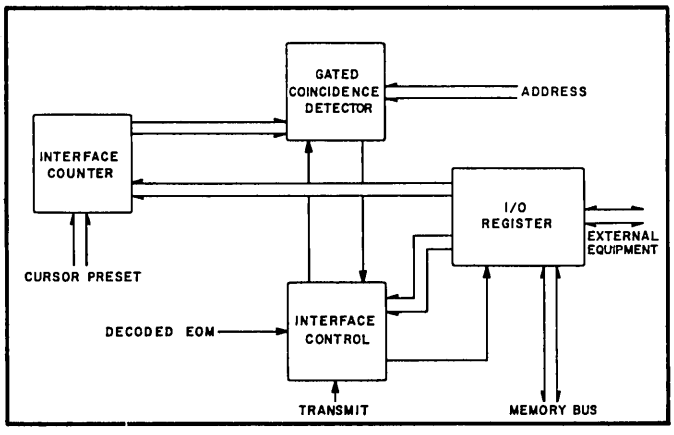

Figure 3-5. Interface Circuits.

3.7 TIMING AND CONTROL (See Figure 3-6)

System timing is derived from a single crystal oscillator. From this source four-phase bit clocks are derived and from these four phase character clocks are derived occurring, for an n bit character, 1/n times as frequently as the bit clocks. There are also a number of other miscellaneous timing pulses generated. The Address Counter is clocked at the character rate and has a total length precisely equivalent to the total number of character spaces in the total memory loop. The output of this counter, then, uniquely identifies a location in memory. Memory Control provides circuitry whereby priority may be established for memory entry or where memory alteration may be inhibited.

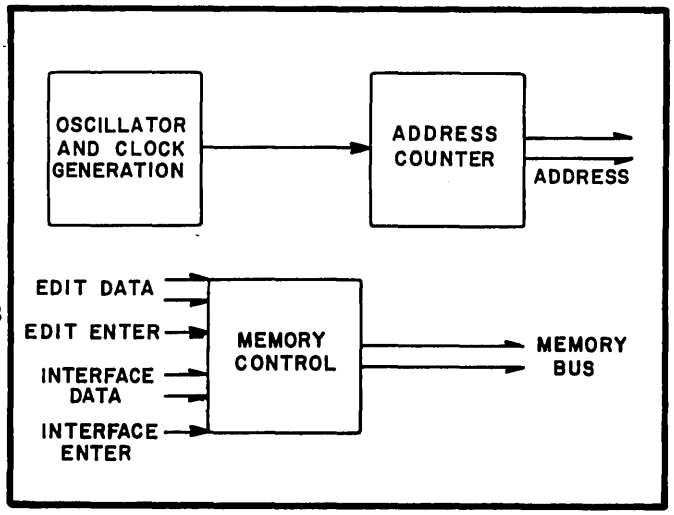

Figure 3-6. Timing and Control Circuits

SECTION 4
MAINTENANCE

4.1 GENERAL

Maintenance consists of cleaning, visual inspection, and troubleshooting. Preventive maintenance should be based on the amount of use and the environment in which the equipment is used.

4.1.1 CLEANING

Remove loose dirt by vacuum or soft dry cloth. Cleaning of the interior of the unit should be done on a semi-annual basis. Abrasive cleaners should not be used.

4.1.2 VISUAL INSPECTION

After cleaning, the equipment should be carefully inspected for such defects as poor connections, damaged parts, etc. The remedy for most visible defects is obvious; however, if heat-damaged parts are discovered, determine the cause before replacing parts or the damage may be repeated.

4.2 ADJUSTMENTS

The following paragraphs are recommended adjustment procedures to be carried out observing the CRT face.

4.2.1 VIDEO AMPLIFIER

The video amplifier is located at the rear and top center of the Irascope Chassis.

- Intensity Limiting (See Figure 4-1)

  - WARNING -

  Improper sequence of adjustment or too rapid an adjustment may burn the Phosphor Screen in the CRT and cause permanent damage. This control is set for a desirable intensity at the factory and should not be considered until CRT Tube aging warrants a brighter level.

  The Front Intensity Control should be fully counter-clockwise but not OFF. As the knob is slowly rotated clockwise and the image gets brighter, the Intensity Limit Control should be turned counter-clockwise to reduce the image intensity. This adjustment should be made in discrete steps for safer control.

- Focus

  The Focus Control (see Figure 4-1) should be set for desired focus with a full pattern on the CRT face and preferably extending to all four corners.

4.2.2 CHARACTER GENERATOR

The Character Generator (see Figure 4-2) is a swing out assembly located on the right side of the Irascope Chassis. The circuits on this assembly deal mainly with character quality and not with size. The adjustment that alters the size (height) of the character, will control the character size within the limits set by the Y Minor Deflection Amplifier.

- Beam Current

  Monoscope Beam Current should be set low and still produce a discernable character.

- Focus

  The Focus should be set for sharp definition of characters while displaying all the characters of the target.

- Sweep Amplitude

  Sweep Amplitude will control the percentage of Horizontal Sweep across the Character.

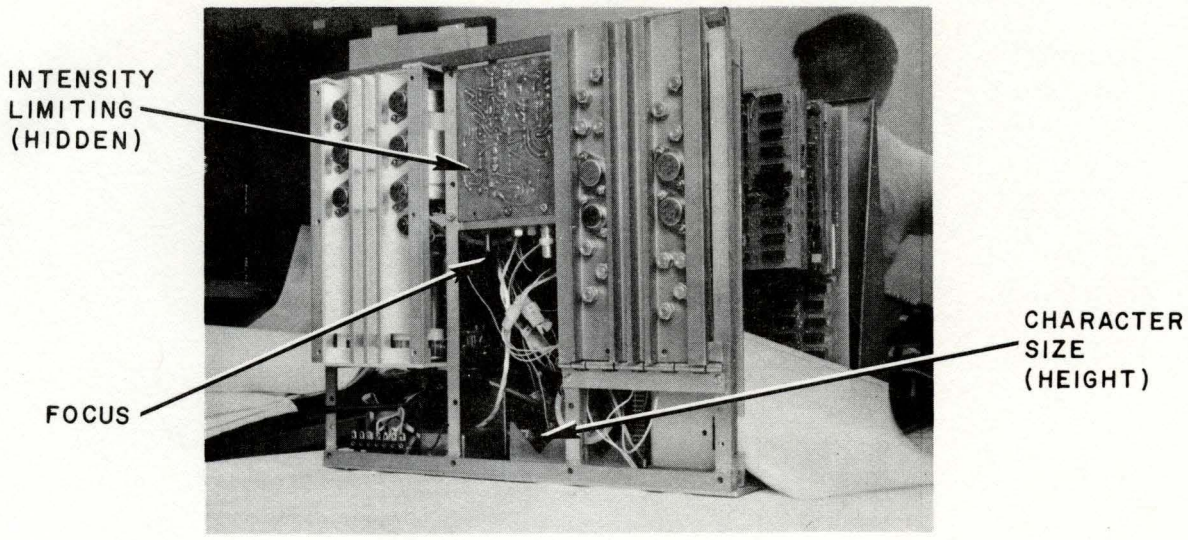

2-69

Figure 4-1. Video Amplifier (Top Center)
Y Minor Deflection Amplifier (Bottom Center)

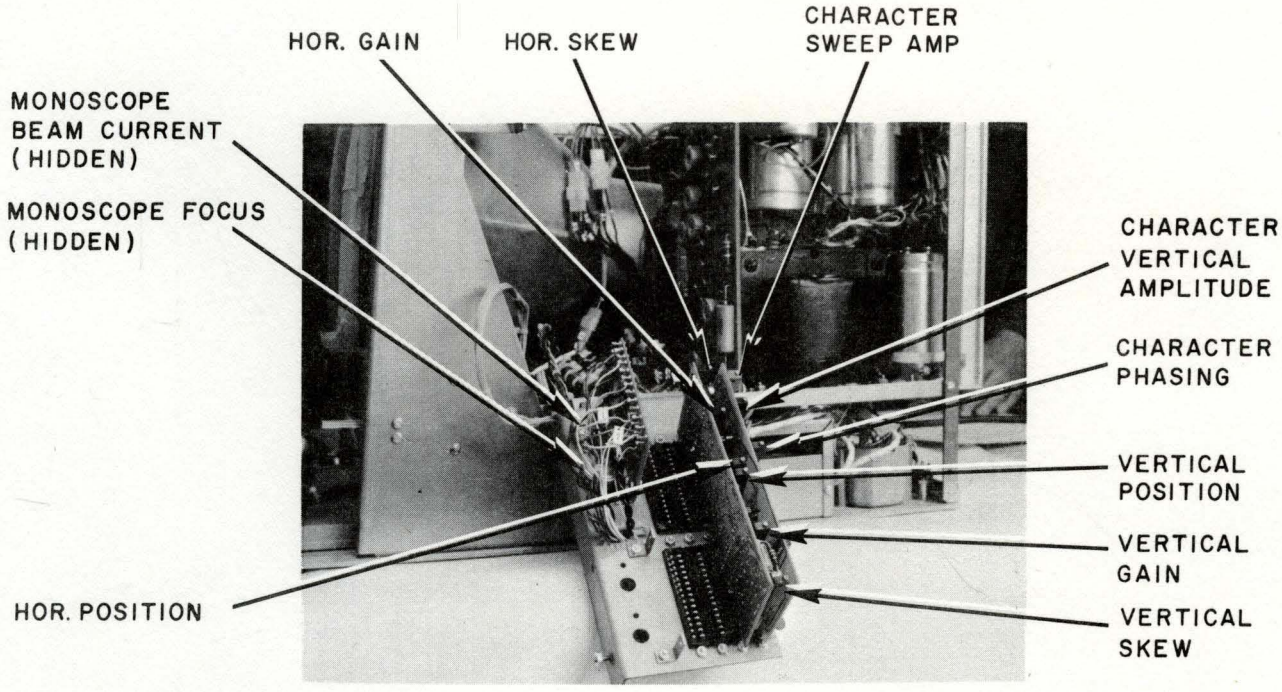

1-69

Figure 4-2. Character Generator

Example:

Insufficient Sweep

Proper Sweep

Excessive Sweep 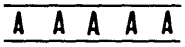

- Vertical Amplitude

  Vertical Amplitude will control the percentage of vertical sweep across the character.

Example:

Insufficient Sweep

Proper Sweep

Excessive Sweep 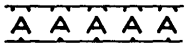

It is desirable to show a minute amount of margin above and below the character. The height of the characters should be controlled with the Y Minor Deflection Amplifier.

- Phasing

  Character Phasing will alter phase relationship between the Monoscope Vertical Scan and CRT Y Deflection.

- Horizontal Position

  Horizontal Position will move the sweep start point on the Monoscope target. This may be adjusted by selecting a character located at the left hand edge of the target and centering it horizontally.

Example:

Proper 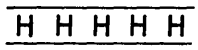

Improper 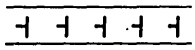

Improper 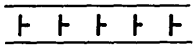

- Vertical Position

  Vertical Positioning is similar to horizontal but a character at the top edge of the target should be chosen.

Example:

Proper 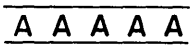

Improper 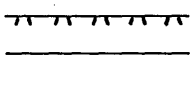

Improper 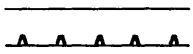

- Gain

  The Horizontal and Vertical Gain Controls will move the characters with respect to the left and top edge. An example of a pattern to choose for alignment would be:

  HOHOA9A9

  Proper Gain HOHOA9A9

  Improper Gain

  H (H(A_9 A_9
  ↑ ↑
  Hor. Vert.
  ↓ ↓
  H) H) A^9 A^9

Position Control Adjustment should precede Gain Control Adjustment.

- Skew

  Prior to adjusting the horizontal and vertical Skew Controls it is necessary to display a pattern of characters located in a row and column on the Monoscope Target.

Example:

Proper Horizontal Skew - HIJKLMNO

Improper Hor. Skew - $H_{IJ}KLMNO$

Proper Vertical Skew - A
I
Q
Y
!
)
1
9

Improper Vertical Skew - A
I
Q
Y
!
)
1
9

4.2.3 DEFLECTION AMPLIFIERS

The Deflection Amplifiers (see Figure 4-3) are located on a swing out assembly at the rear of the Irascope Chassis.

Prior to adjustment of the Horizontal and Vertical Centering Controls the intensity should be increased to a level where the Raster Lines can be observed. It will also be necessary to display a complete row of characters at the top and bottom of the CRT Face. In order to have a complete row at the bottom, it may be necessary to insert several carriage returns after the first row.

With the Raster Lines defining the limits of the image, adjust the Horizontal and Vertical Controls for optimum image centering.

4.2.4 Y MINOR DEFLECTION AMPLIFIER

The Amplifier Board (see Figure 4-1) is mounted at the rear and bottom of the Irascope Chassis. The control for raster Line thickness, or character height, is located on this board and is accessible from the Chassis rear.

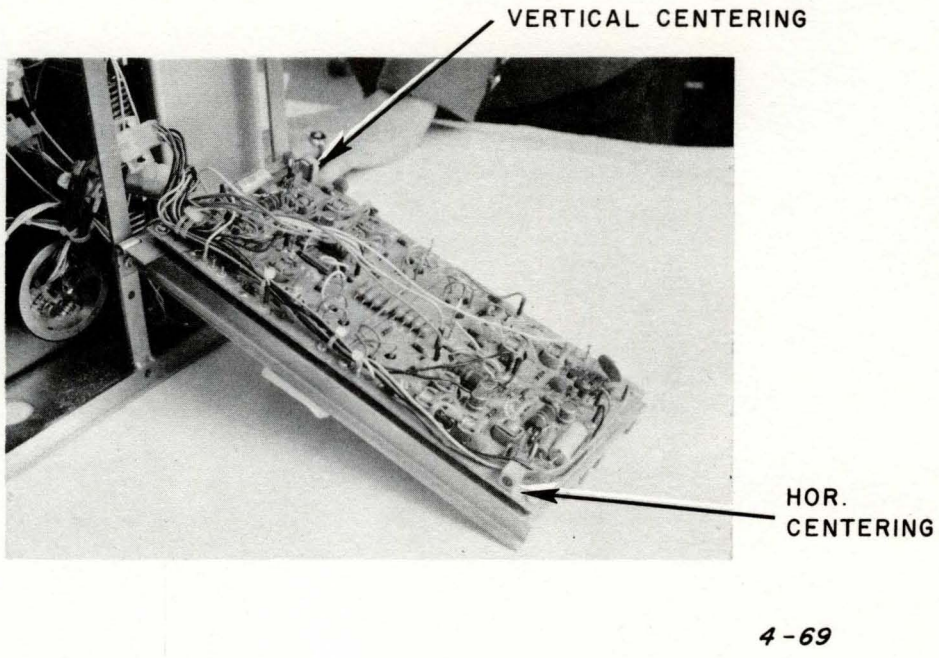

Figure 4-3. X & Y Deflection Amplifiers

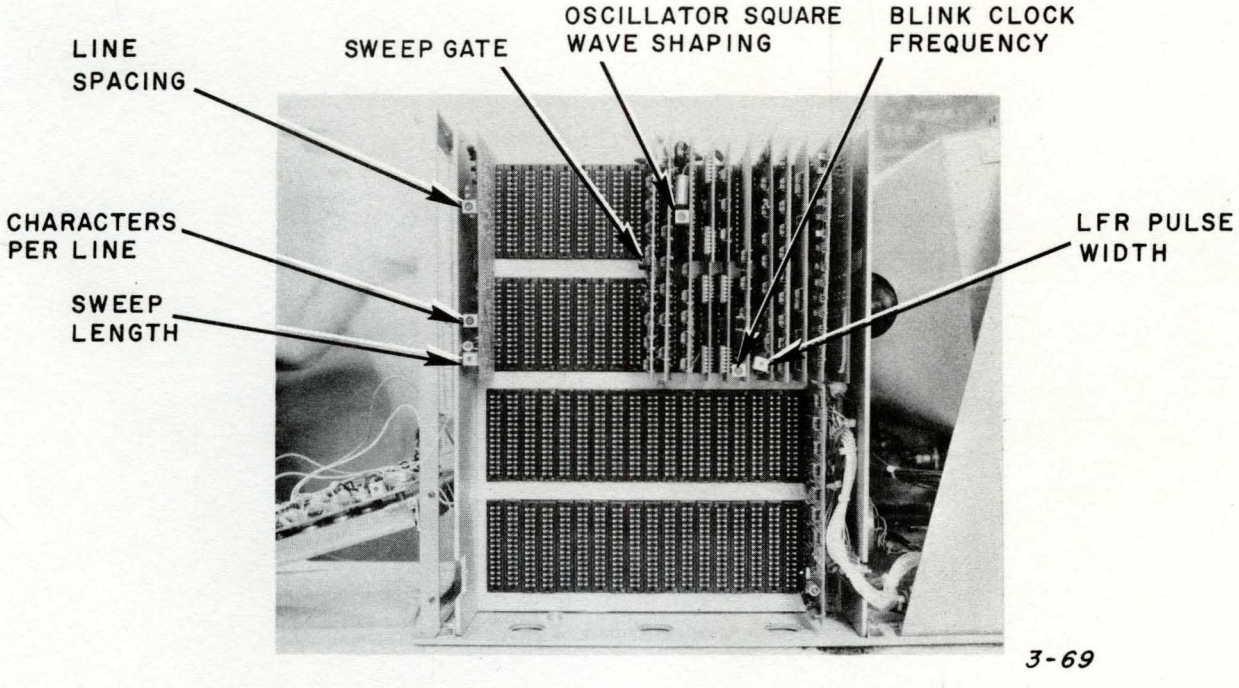

Figure 4-4. Logic Rack Assembly

4.2.5 LOGIC RACK ASSEMBLY

The Logic Rack (see Figure 4-4) is a swing out assembly located on the left of the Irascope Chassis.

- Line Space (Vertical Drive, Card Location 20)

  The Line Spacing Controls R7, R13, R20 (top to bottom, Card Location 20) will alter the space between Raster Lines.

  R7 - Positions Line Signal at Zero*

  R13 - Adjusts Feedback for D/A Gain*

  R20 - Adjusts Output Amplitude*

* Ref. Dwg. 5394 - Sheet 1.

- Characters Per Line

  This control will expand the Horizontal Sweep so that the number of characters on one line can be changed.

- Sweep Length (Horizontal Line Length)

  This control will change the Raster Line length and should follow the characters per line adjustment.

- Sweep Gate (Retrace Blanking, Card Location 11)

  The retrace period of the beam is equivalent to six character times and the display should be blanked for the sweep return. The Sweep Gate Control should be adjusted so that the left margin is aligned with the first character on the first line.

  The sequence for this adjustment should be to initially reset, then clear and type in several characters and a carriage return for a number of short lines to define a left margin.

- Oscillator Square Wave Shaping

  For this adjustment it will be necessary to use an Oscilloscope and monitor Card Location 9, Pin A6. The control should be set for the best display of a square wave.

- Blink Clock Frequency (Card Location 6)

  Adjustment of the Blink Clock Frequency will change the blinking effect of the Cursor and the speed with which the Cursor moves from character to character. This adjustment can best be made while depressing the Advance Space Key.

- LFR Pulse Width (Card Location 5)

  The Load Function Register pulse width may be set for a duration of 600μs to 1 ms. This period of time is to allow for switch bounce to settle before loading the Function Register. An Oscilloscope will be necessary to monitor the pulse width signal at Location 5, Pin B29. The switch bounce transients may be monitored on the same card at Pin B13.

4.2.6 DELAY LINE LENGTH

Shocks sustained by the delay line during shipment may be cause for one or a combination of the following symptoms:

1. Wrong Characters Being Displayed
2. Garbled Characters
3. Precessing Characters
4. All Question Marks
5. All Blanks
6. Inability to Clear the Display

It will therefore be necessary to make this adjustment prior to any other.

A Tektronix 453 Oscilloscope or equivalent is to be used for monitoring the points to be mentioned.

- Disconnect the line from Card 22, Pin A30 to Pin B9.
- Connect a wire from Card 10, Pin B5 (Start Pulse) to Card 22, Pin B9 and monitor this point while triggering with the start pulse. The second channel of the scope should monitor Card 22, Pin A30.

Proper alignment of the line will display identical sweeps on the scope. The sweep should be completely clean for the entire period of 16.66 ms. The Delay Line length adjusting screw is to be found by lifting the keyboard. The screw will be seen on the right corner of the Delay Line Assembly. A long shank screwdriver is preferable for the adjustment.

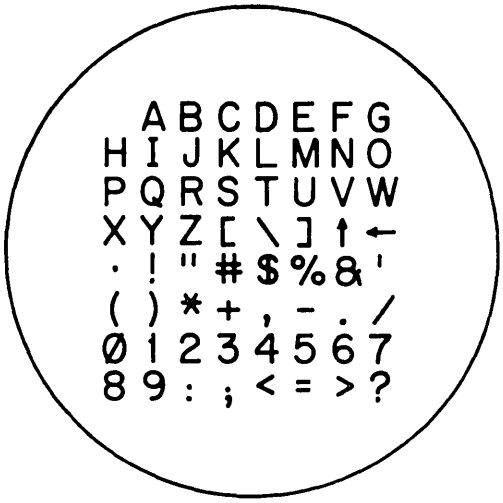

Figure 4-5. Standard Monoscope Font

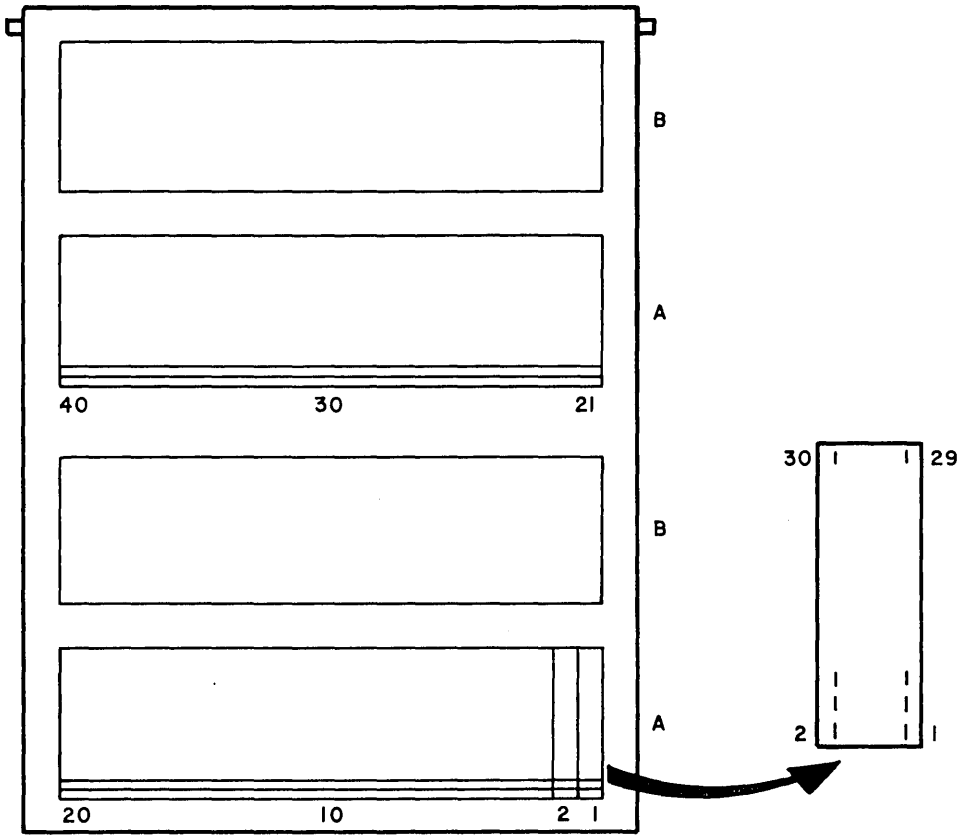

Figure 4-6. Logic Rack Assembly (Wiring Side)

SECTION 5
TROUBLESHOOTING

TO BE SUPPLIED

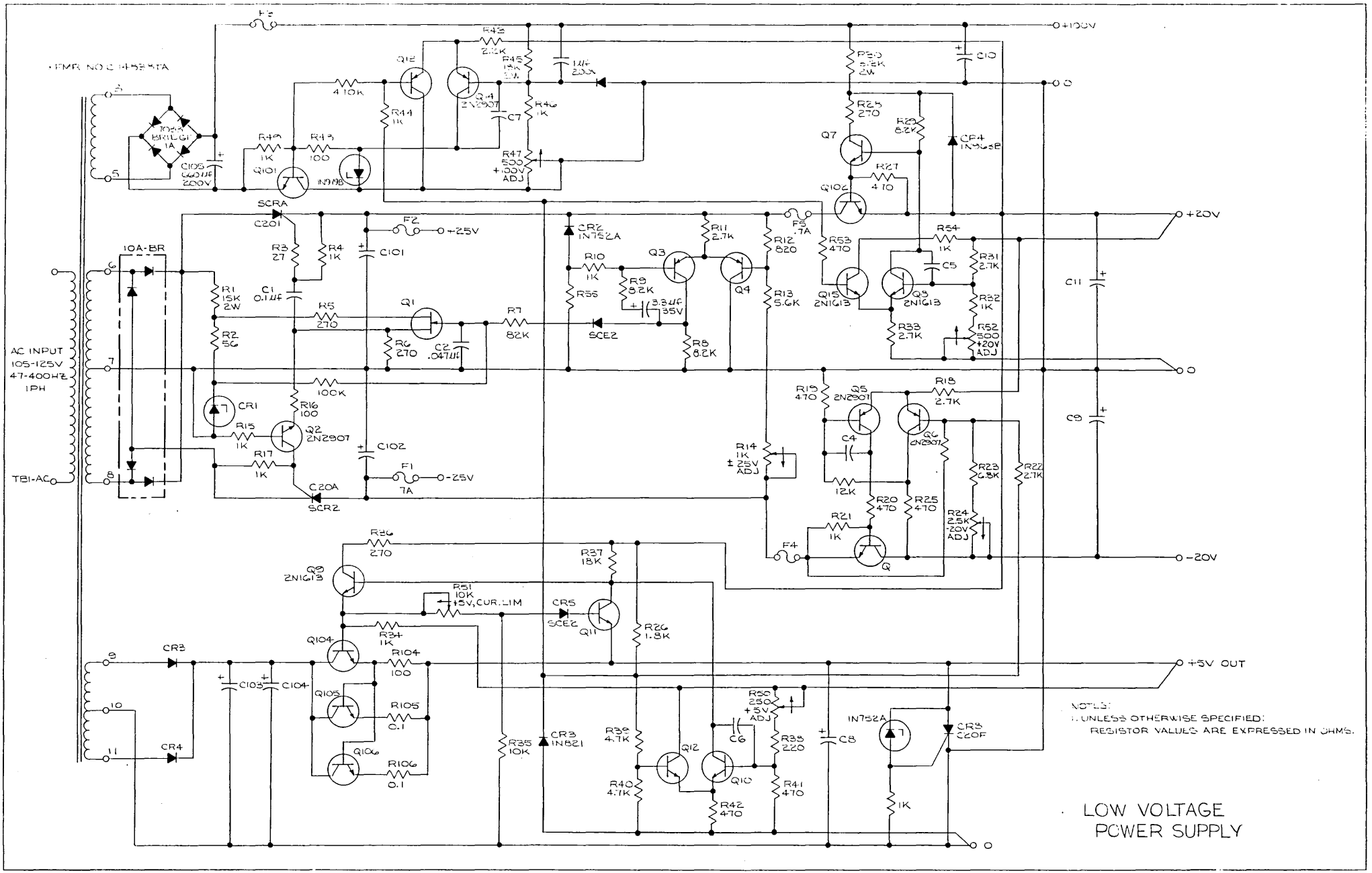
AC INPUT
105-125V
47-400HZ
1PH
TBI-AC
10A-BR
SCR1
SCR2
+100V
+20V
0
-20V
+5V OUT
+25V
-25V
LOW VOLTAGE
POWER SUPPLY
NOTES:
1. UNLESS OTHERWISE SPECIFIED:
RESISTOR VALUES ARE EXPRESSED IN OHMS.

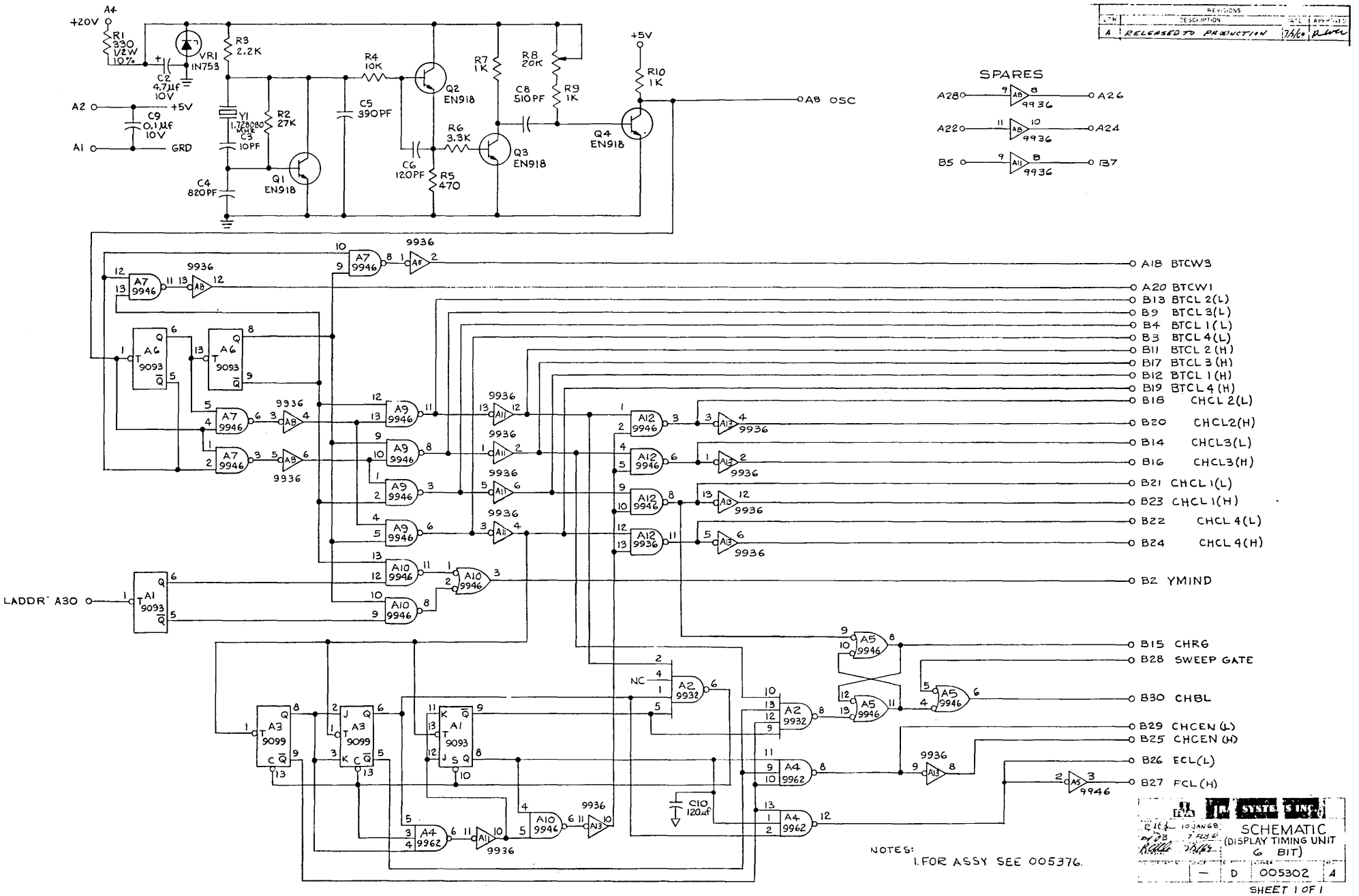

REVISIONS			
LTR	DESCRIPTION	DATE	APPROVED
A	RELEASED TO PRODUCTION	7/1/68	

SCHEMATIC (DISPLAY TIMING UNIT 6 BIT)

SIZE	DWG NO	REV
D	005302	A

SHEET 1 OF 1

REVISIONS			
LTR	DESCRIPTION	DATE	APPROVED
A	RELEASED FOR PRODUCTION	3/7/69	

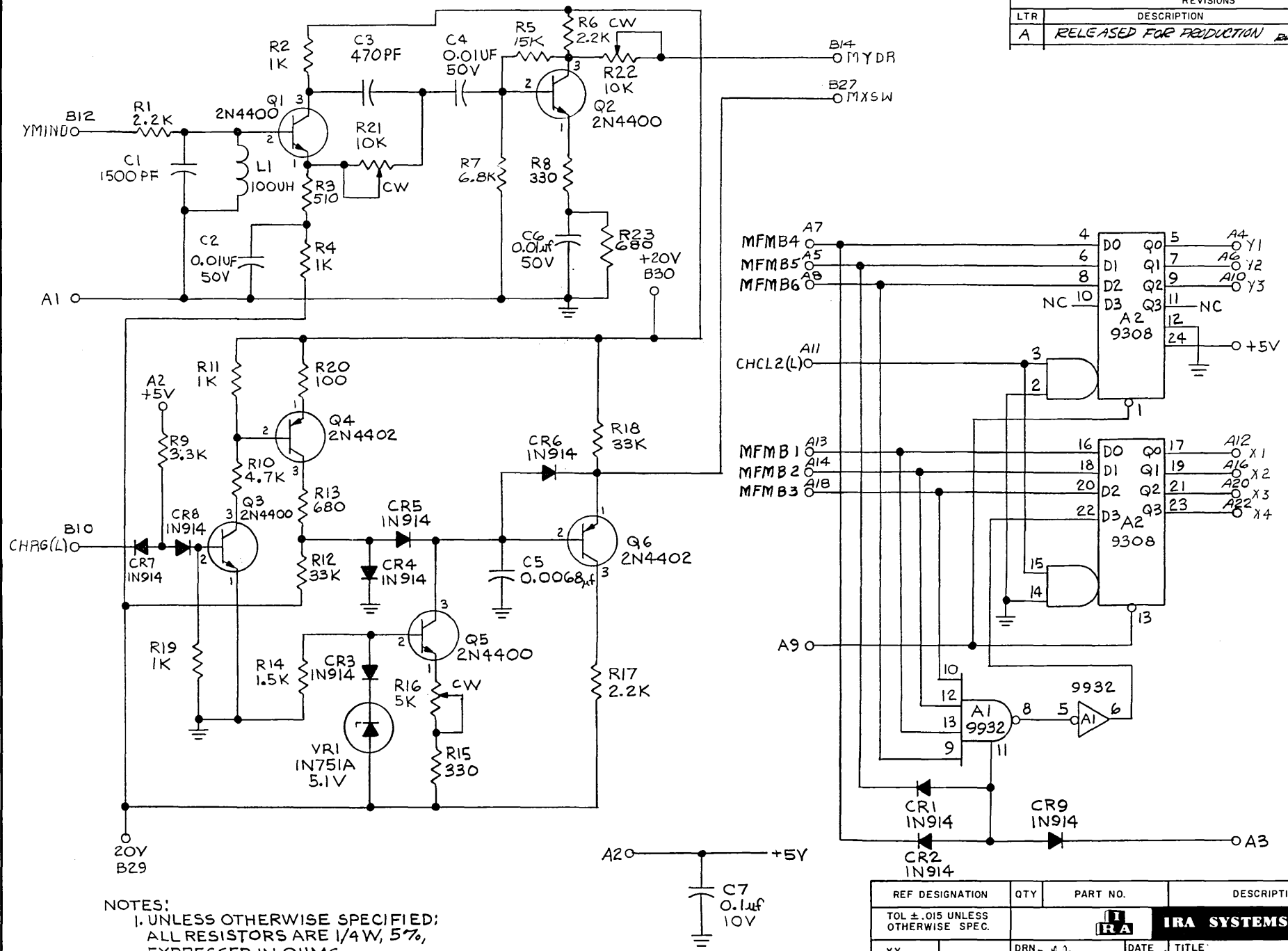

NOTES:
1. UNLESS OTHERWISE SPECIFIED: ALL RESISTORS ARE 1/4W, 5%, EXPRESSED IN OHMS.
2. FOR ASSY SEE 005354.

REF DESIGNATION	QTY	PART NO.	DESCRIPTION	ITEM NO.
TOL ±.015 UNLESS OTHERWISE SPEC.			IRA SYSTEMS INC.	
.XX	DRN P. A. Jam	DATE 13 JAN 69	TITLE: SCHEMATIC (MONOSCOPE DEFLECTION DRIVE)	
.XXX	CHK L. Sirois	15 JAN 69		
MATERIAL:	APPD	20 JAN 69		
FINISH:	APPD			
REMOVE BURRS & SHARP EDGES .005R MAX.	APPD			
	CLASSIFICATION	SCALE —	SIZE C	NUMBER 005305 REV. A

SHEET 1 OF 1

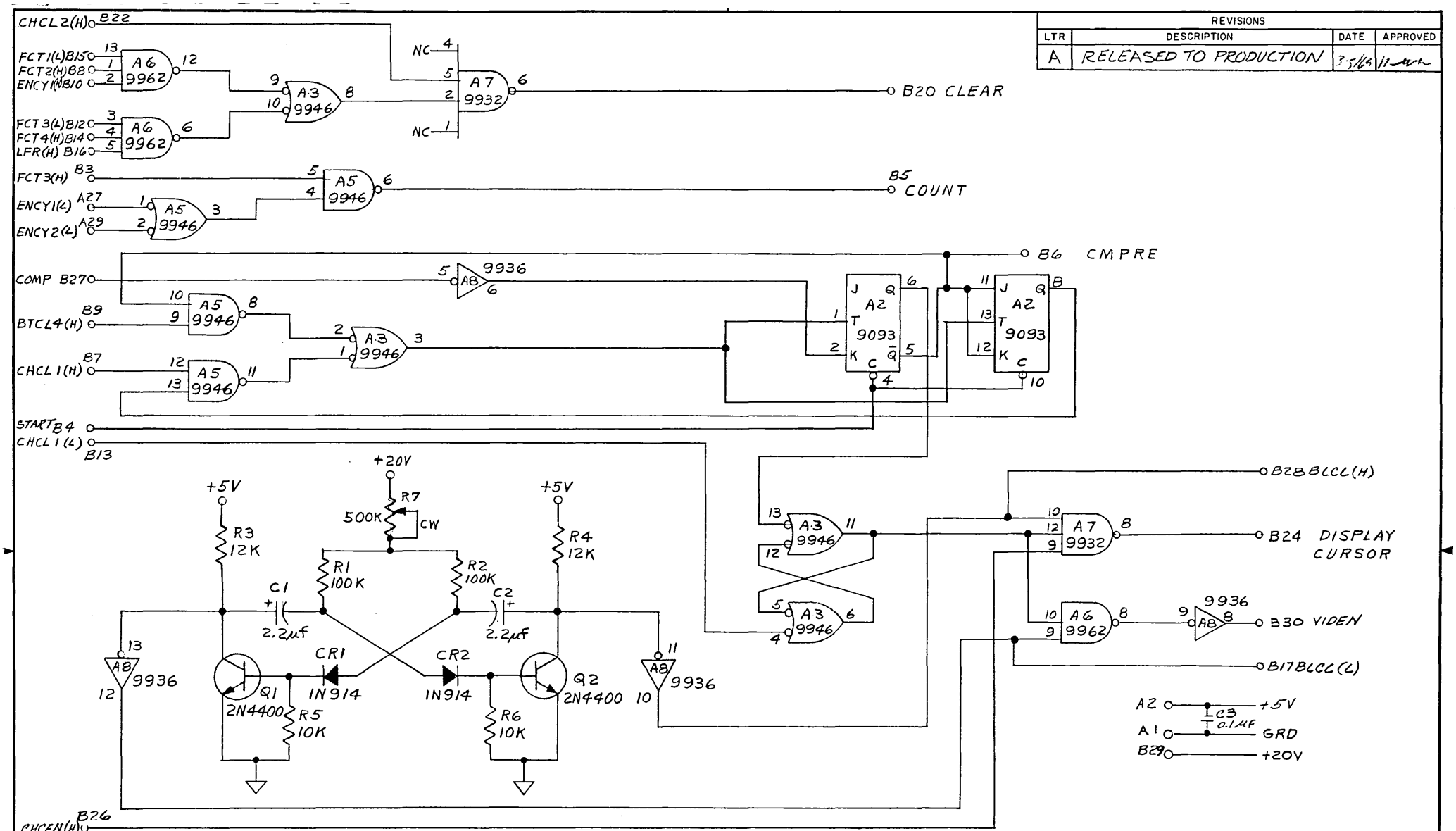

NOTES

1. UNLESS OTHERWISE SPECIFIED:
ALL RESISTORS ARE ¼W, 5% EXPRESSED IN OHMS
2. FOR ASSEMBLY SEE 005323

REVISIONS			
LTR	DESCRIPTION	DATE	APPROVED
A	RELEASED TO PRODUCTION	3-5-68	

REF DESIGNATION	QTY	PART NO.	DESCRIPTION	ITEM NO.
TOL ±.015 UNLESS OTHERWISE SPEC.		IRA	IRA SYSTEMS INC.	
.XX	DRN G. Brandt	DATE 2/4/67	TITLE SCHEMATIC (CURSOR CONTROL BOARD)	
.XXX	CHK JC	6-2-7		
MATERIAL:	APPD	7/5/67		
FINISH:	APPD			
REMOVE BURRS & SHARP EDGES .005R MAX.	APPD			
	CLASSIFICATION	SCALE —	SIZE C	NUMBER 005813 REV A

SHEET 1 OF 1

REVISIONS			
LTR	DESCRIPTION	DATE	APPROVED

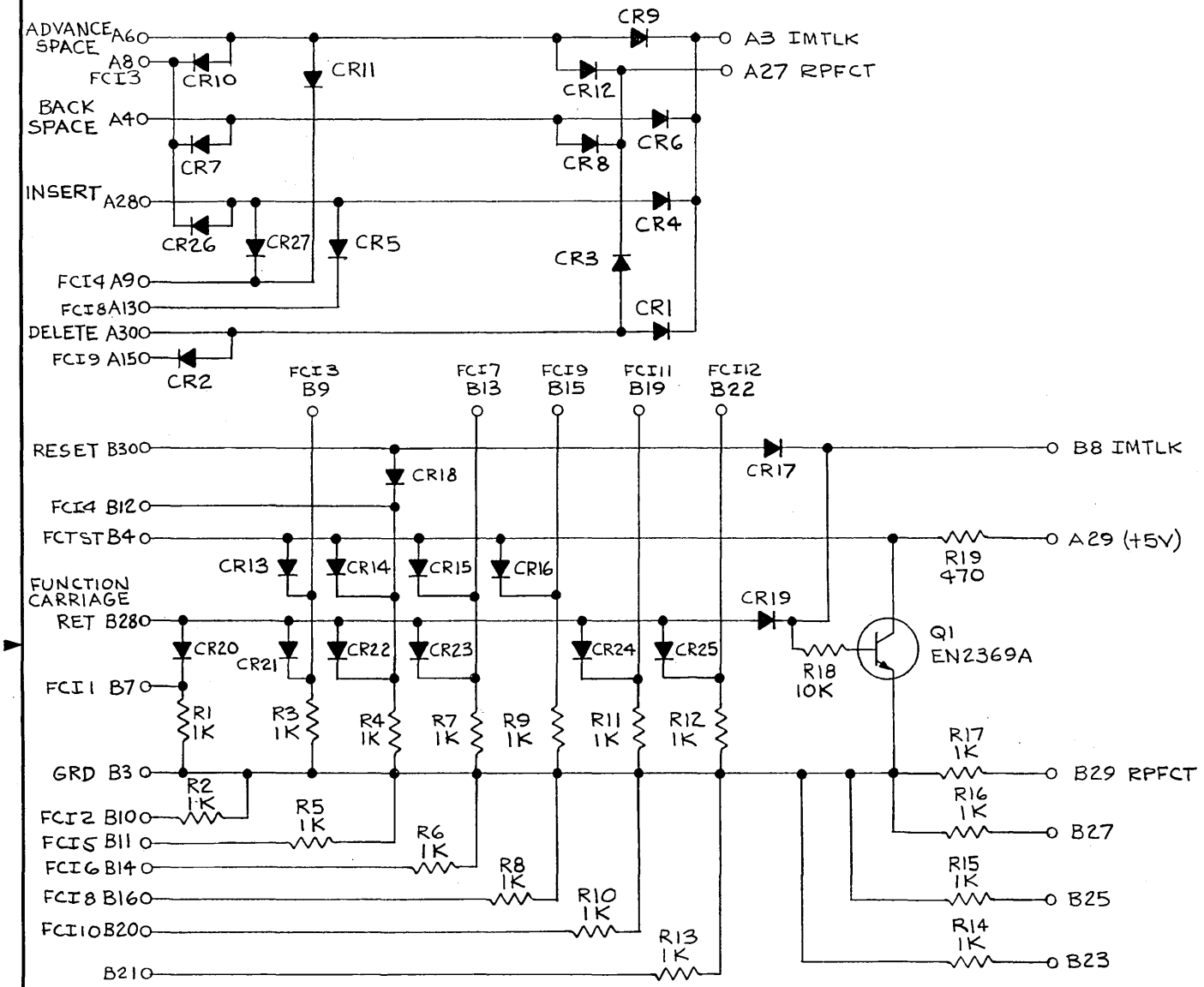

NOTES:
1. UNLESS OTHERWISE SPECIFIED: ALL RESISTORS ARE 1/4W, 5%, EXPRESSED IN OHMS.
2. UNLESS OTHERWISE SPECIFIED: ALL DIODES IN914.
3. FOR ASSEMBLY SEE 005378.

REF DESIGNATION	QTY	PART NO.	DESCRIPTION	ITEM NO.
TOL ± .015 UNLESS OTHERWISE SPEC.		IRA	IRA SYSTEMS INC.	
.XX	DRN		DATE 21 Nov 69	TITLE: SCHEMATIC (FUNCTION ENCODE A)
.XXX	CHK		22 Nov 69	
MATERIAL:	APPD		24 Nov 69	
FINISH:	APPD			
	APPD			
REMOVE BURRS & SHARP EDGES .005R MAX.	CLASSIFICATION	SCALE —	SIZE C	NUMBER 005817	REV. —

REVISIONS			
LTR	DESCRIPTION	DATE	APPROVED

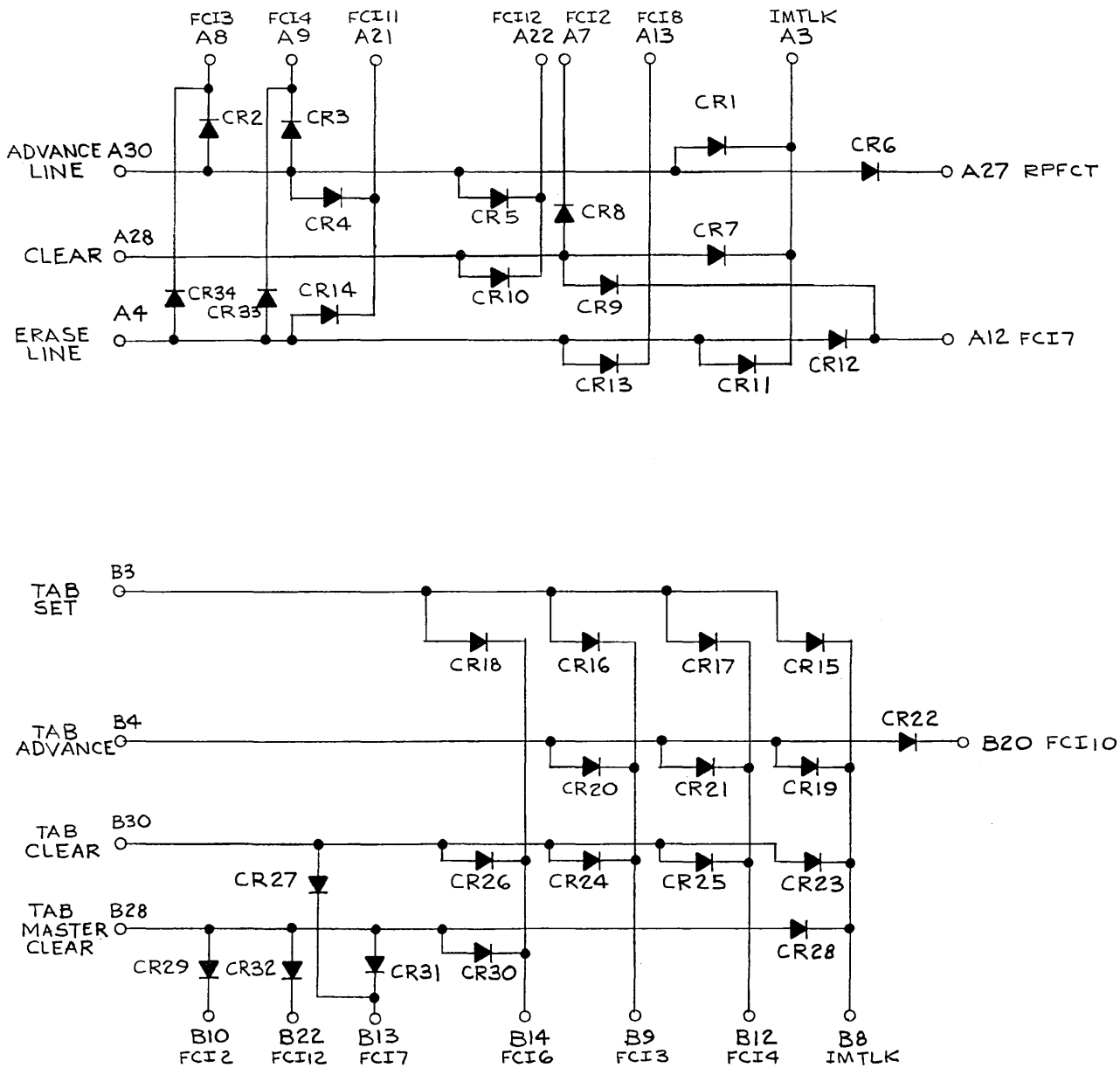

NOTES:
1. UNLESS OTHERWISE SPECIFIED: ALL DIODES ARE IN914.
2. FOR ASSEMBLY SEE 005379.

REF DESIGNATION	QTY	PART NO.	DESCRIPTION	ITEM NO.
TOL ±.015 UNLESS OTHERWISE SPEC.			IRA SYSTEMS INC.	
.XX	DRN R. H. Jun	DATE 20 JAN 69	TITLE SCHEMATIC (FUNCTION ENCODE B)	
.XXX	CHK [signature]	23 JAN 69		
MATERIAL:	APPD [signature]	2/19/69		
	APPD			
FINISH:	APPD			
REMOVE BURRS & SHARP EDGES .005R MAX.	CLASSIFICATION	SCALE —	SIZE C / NUMBER 005818	REV. —

Charrette 1498

REVISIONS			
LTR	DESCRIPTION	DATE	APPROVED
A	RELEASED TO PRODUCTION	3/3/69	

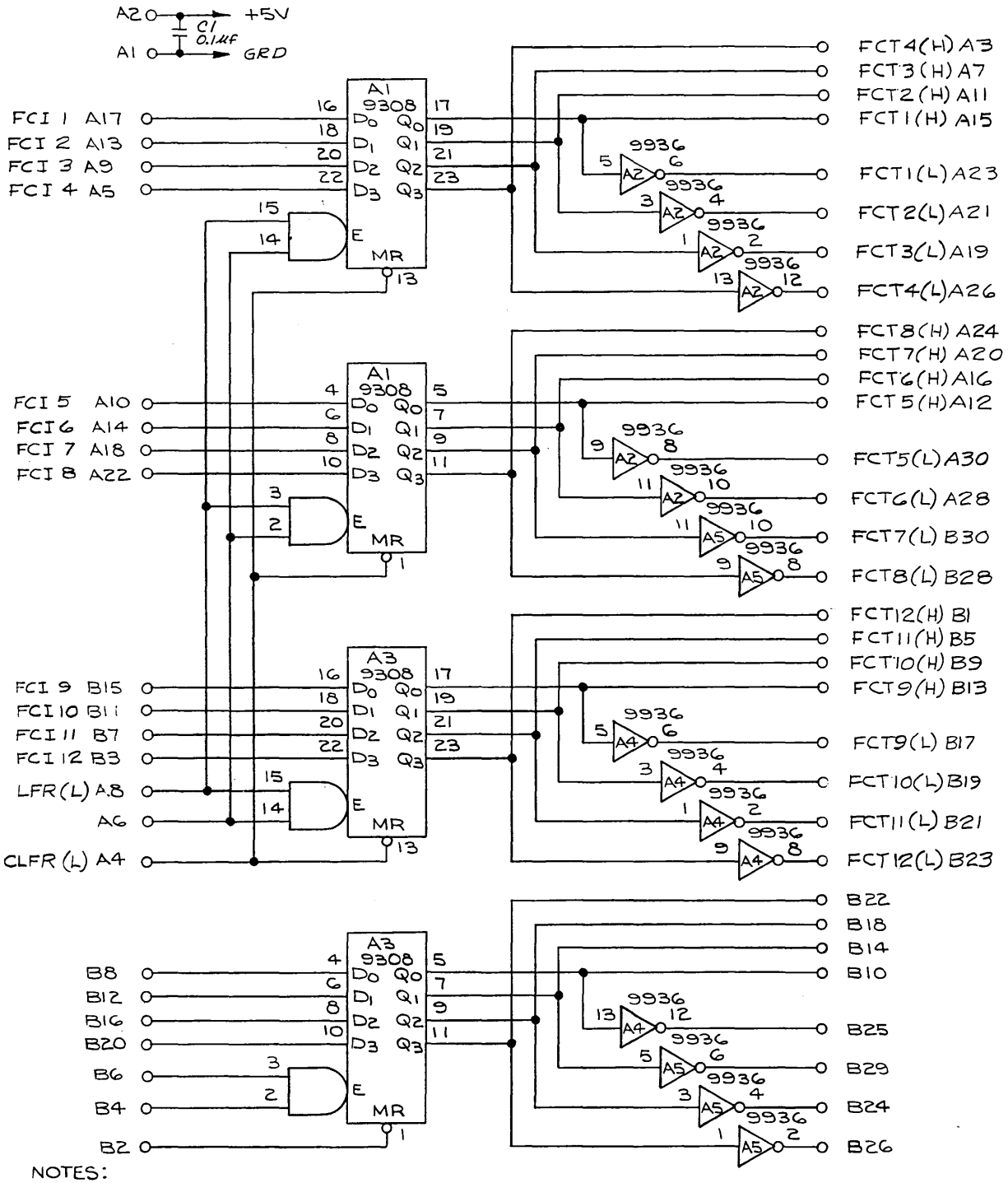

SPARES

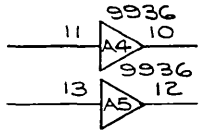

NOTES:
1. FOR ASSEMBLY SEE 005375.

REF DESIGNATION	QTY	PART NO.	DESCRIPTION	ITEM NO.
TOL ±.015 UNLESS OTHERWISE SPEC.		IRA	IRA SYSTEMS INC.	
.XX	DRN P.Knowlton	DATE 2/7/69	TITLE LOGIC DIAGRAM (FUNCTION CONTROL REGISTER)	
.XXX	CHK			
MATERIAL:	APPD			
FINISH:	APPD			
REMOVE BURRS & SHARP EDGES .005R MAX.	APPD			
	CLASSIFICATION	SCALE NONE	SIZE C	NUMBER 005820 REV. A

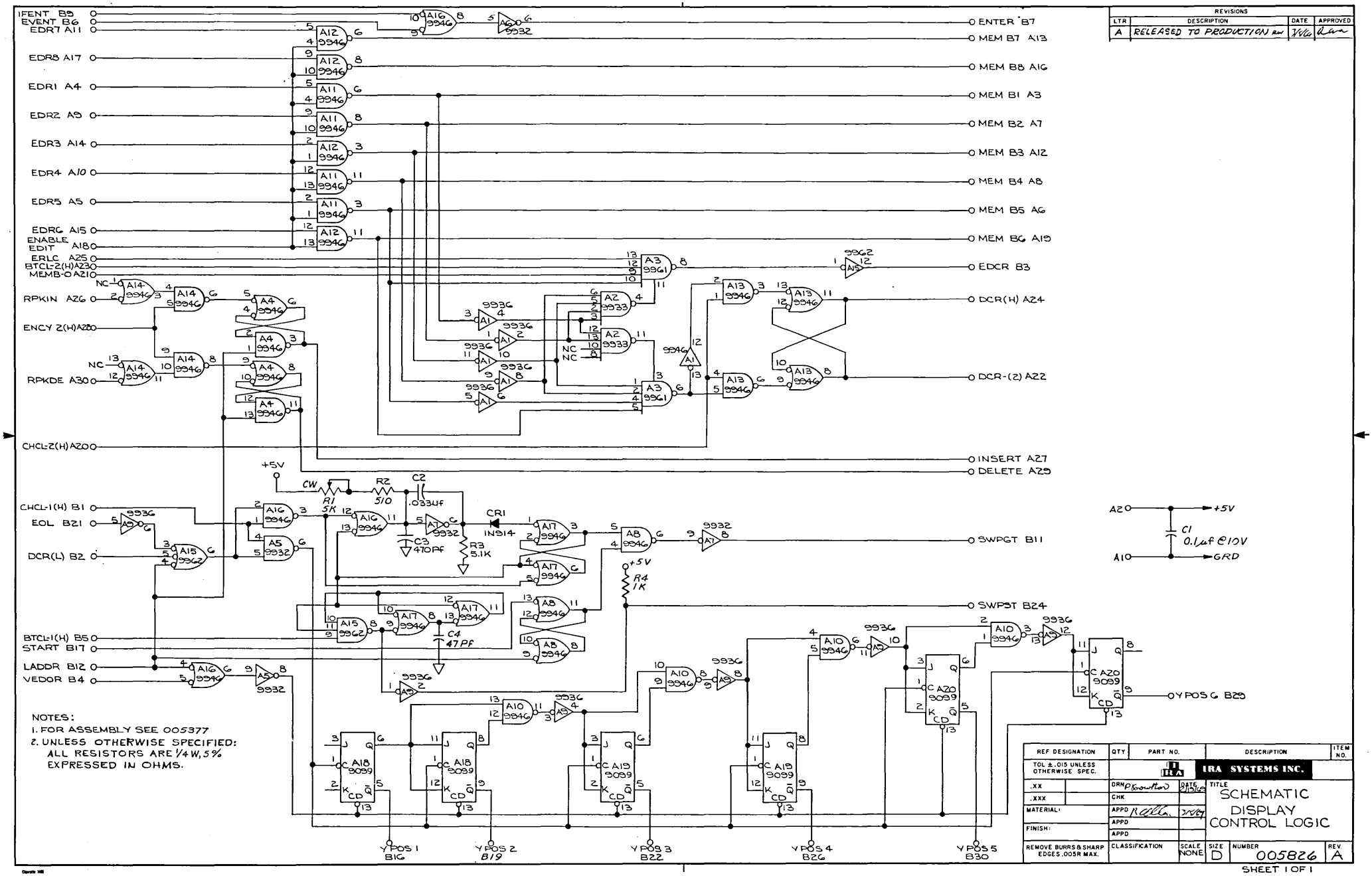

NOTES:
1. FOR ASSEMBLY SEE 005377
2. UNLESS OTHERWISE SPECIFIED: ALL RESISTORS ARE 1/4 W, 5% EXPRESSED IN OHMS.

REVISIONS			
LTR	DESCRIPTION	DATE	APPROVED
A	RELEASED TO PRODUCTION	3/4/69	[illegible]

REF DESIGNATION	QTY	PART NO.	DESCRIPTION	ITEM NO.
TOL ±.015 UNLESS OTHERWISE SPEC.			IRA SYSTEMS INC.	
.XX		DRN P. Knowlton	DATE 2/13/69	TITLE SCHEMATIC DISPLAY CONTROL LOGIC
.XXX		CHK		
MATERIAL:		APPD R. [illegible]	3/4/69	
FINISH:		APPD		
		APPD		
REMOVE BURRS & SHARP EDGES .005R MAX.		CLASSIFICATION	SCALE NONE	SIZE D NUMBER 005826 REV. A

SHEET 1 OF 1

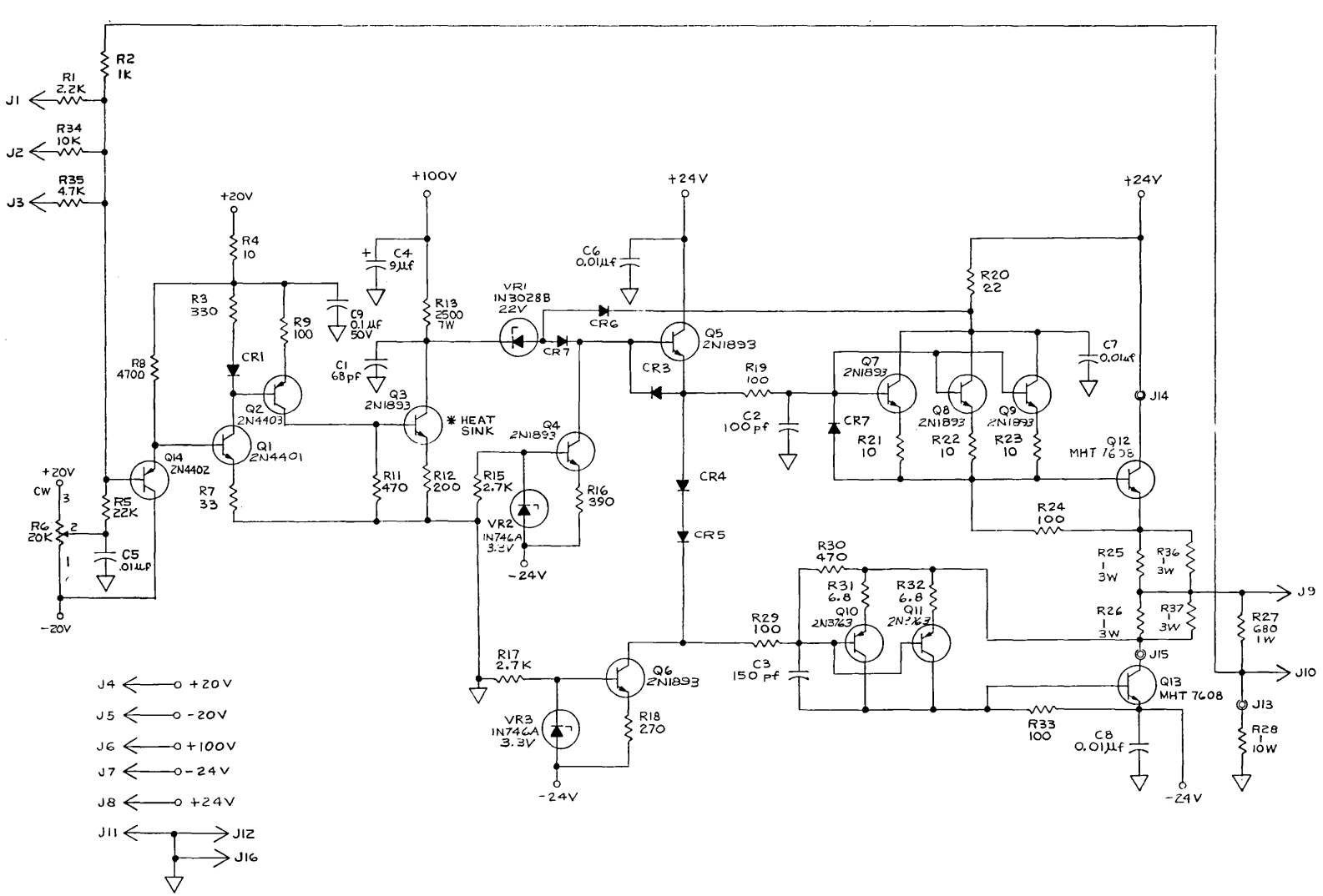

REVISIONS			
LTR	DESCRIPTION	DATE	APPROVED

NOTES:
1. UNLESS OTHERWISE SPECIFIED;
   A. ALL RESISTORS ARE 1/4W, 5%, EXPRESSED IN OHMS.
   B. ALL DIODES ARE IN914.

CONTRACT NUMBER	REF DESIGNATION	QTY	PART NO.	DESCRIPTION	ITEM NO.
	TOL ± .015 UNLESS OTHERWISE SPEC.			IRA SYSTEMS INC.	
	.XX	DRN R. Mann	DATE 9-1-71	TITLE SCHEMATIC (DEFLECTION AMPLIFIER)	
	.XXX	CHK DP			
005831 1	MATERIAL	APPD			
NEXT ASSY NO. QTY	FINISH	APPD			
USED ON		APPD			
✓ SURFACE FINISH	REMOVE BURRS & SHARP EDGES .005R MAX.	CLASSIFICATION	SCALE NONE	SIZE D NUMBER 005831	REV —

SHEET 1 OF 1

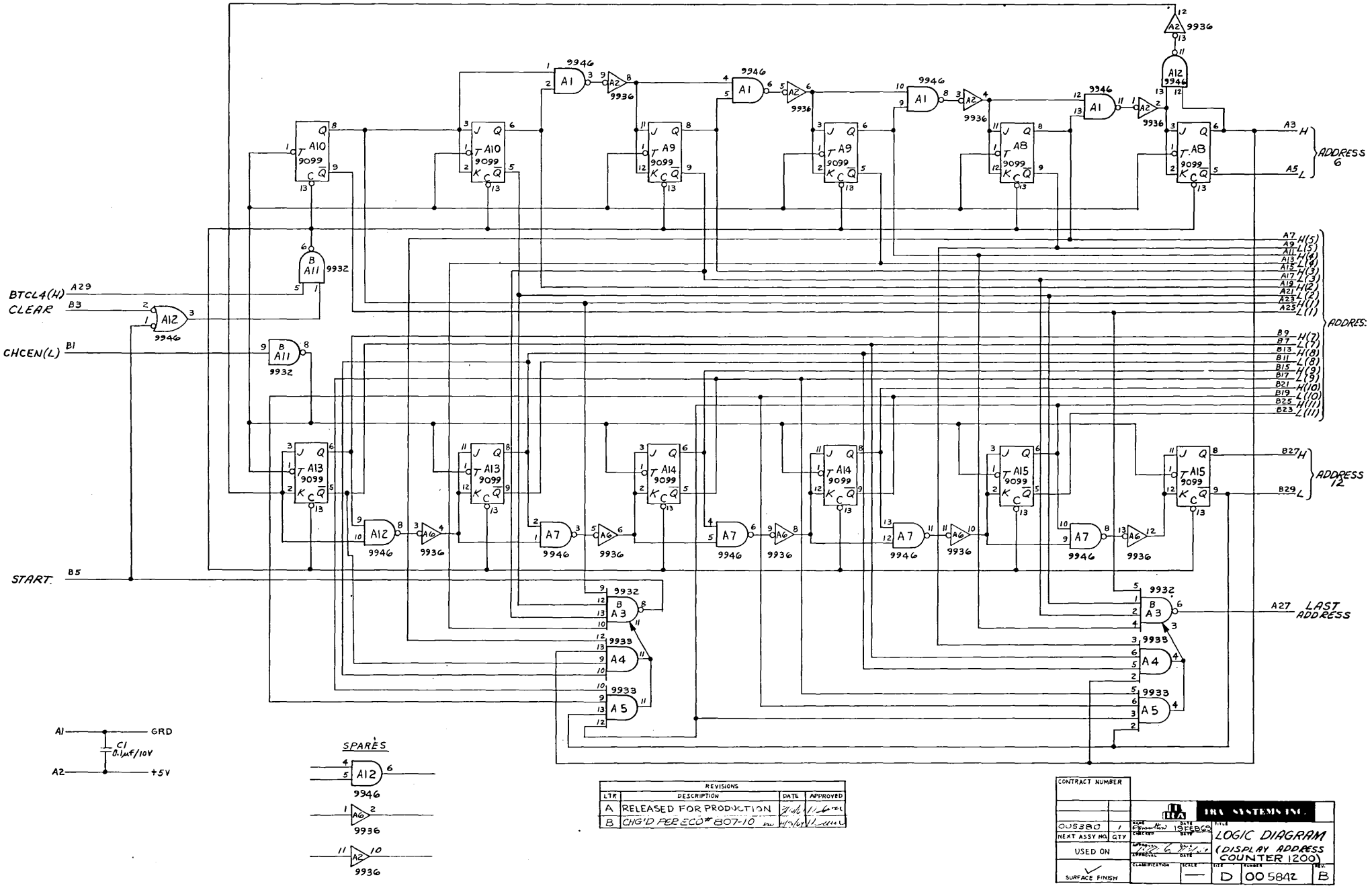

REVISIONS			
LTR	DESCRIPTION	DATE	APPROVED
A	RELEASED FOR PRODUCTION		
B	CHG'D PER ECO# 807-10		

CONTRACT NUMBER		
005380	1	
NEXT ASSY NO.	QTY	
USED ON		
✓ SURFACE FINISH		

DEC SYSTEMS INC.

TITLE: LOGIC DIAGRAM (DISPLAY ADDRESS COUNTER 1200)

SIZE D | NUMBER 005842 | REV. B

Sheet 1 of 1

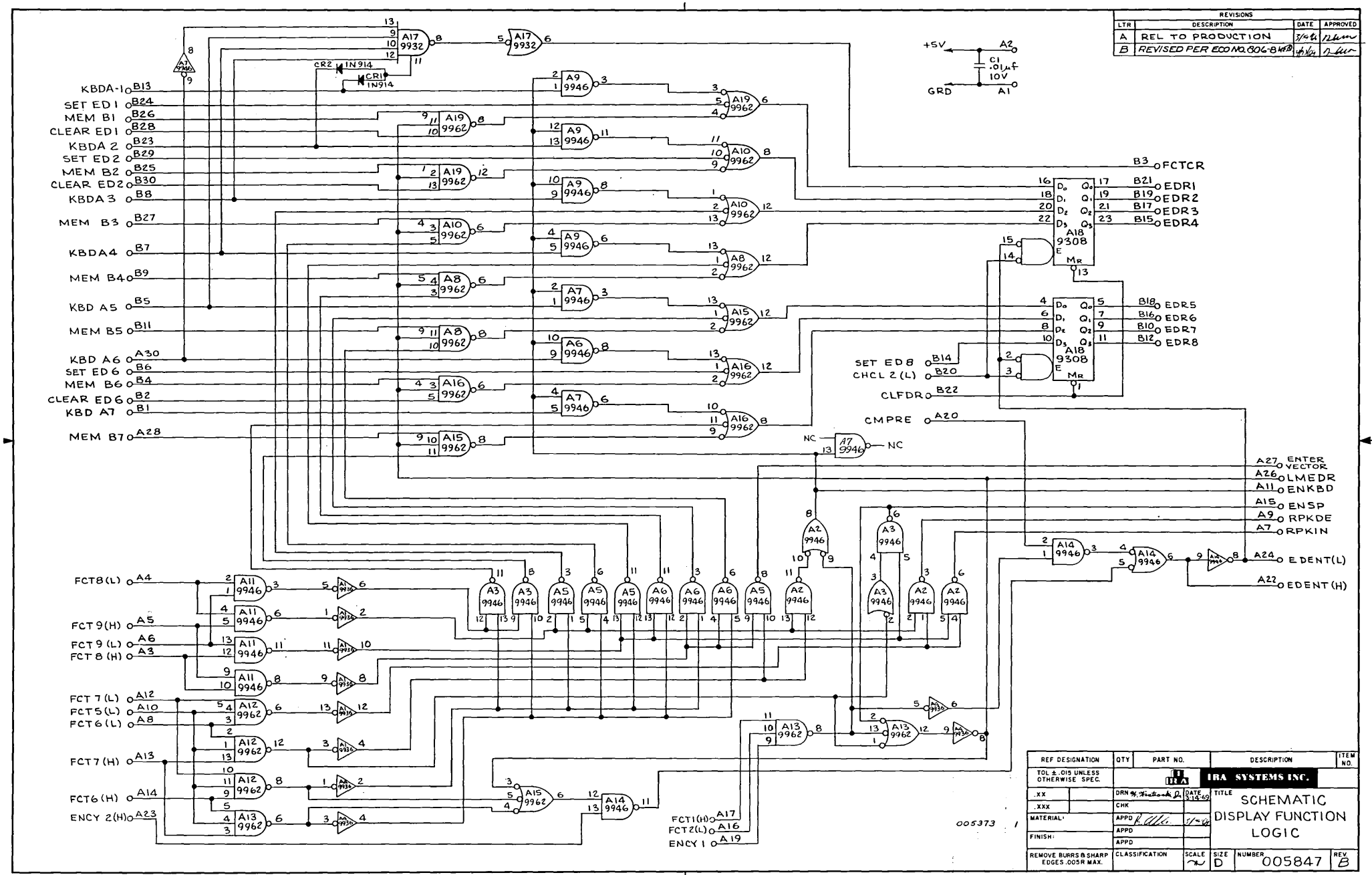

REVISIONS			
LTR	DESCRIPTION	DATE	APPROVED
A	REL TO PRODUCTION	3/4/69	[illegible]
B	REVISED PER ECO NO. 806-8 [illegible]	[illegible]	[illegible]

REF DESIGNATION	QTY	PART NO.	DESCRIPTION	ITEM NO.
TOL ± .015 UNLESS OTHERWISE SPEC.			IRA SYSTEMS INC.	
.XX		DRN [illegible]	DATE 3-14-69	TITLE SCHEMATIC DISPLAY FUNCTION LOGIC
.XXX		CHK		
MATERIAL:		APPD [illegible]	3/4/69	
FINISH:		APPD		
		APPD		
REMOVE BURRS & SHARP EDGES .005R MAX.	CLASSIFICATION	SCALE	SIZE D	NUMBER 005847 REV. B

SHEET 1 OF 1

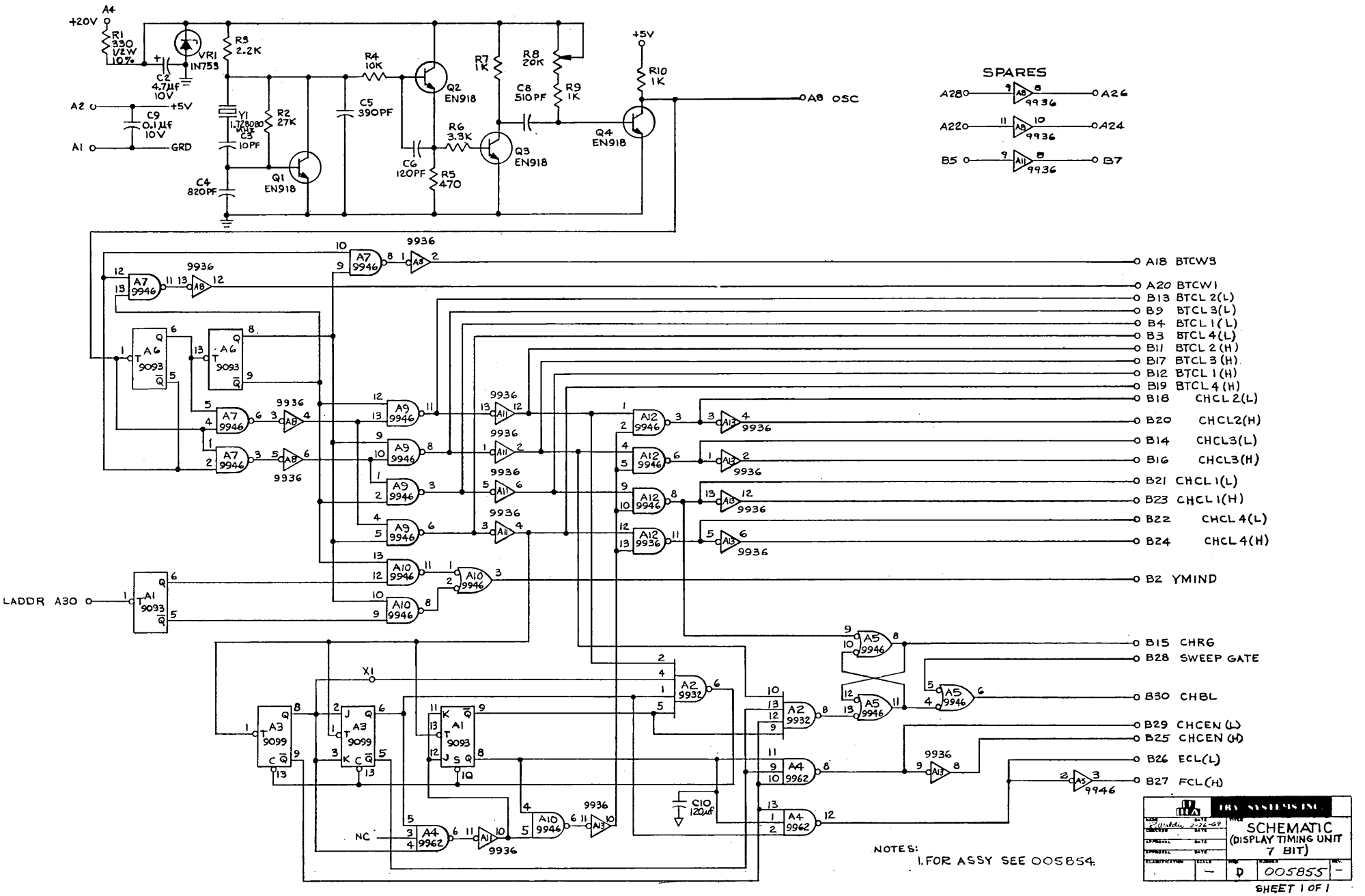
A4
+20V
R1 330 1/2W 10%
VR1 IN753
R3 2.2K
C2 4.7µF 10V
A2
+5V
C9 0.1µF 10V
A1
GRD
Y1 1.728000 MHz
C3 10PF
R2 27K
C4 820PF
Q1 EN918
C5 390PF
R4 10K
Q2 EN918
C6 120PF
R5 470
R6 3.3K
Q3 EN918
R7 1K
R8 20K
C8 510PF
R9 1K
+5V
R10 1K
Q4 EN918
A8 OSC
SPARES
A28
A26
A22
A24
B5
B7
9936
A7 9946
A18 BTCW8
A20 BTCW1
B13 BTCL 2(L)
B9 BTCL 3(L)
B4 BTCL 1(L)
B3 BTCL 4(L)
B11 BTCL 2(H)
B17 BTCL 3(H)
B12 BTCL 1(H)
B19 BTCL 4(H)
B18 CHCL 2(L)
B20 CHCL2(H)
B14 CHCL3(L)
B16 CHCL3(H)
B21 CHCL 1(L)
B23 CHCL 1(H)
B22 CHCL 4(L)
B24 CHCL 4(H)
A6 9093
A9 9946
A12 9946
A12 9936
LADDR A30
A1 9093
B2 YMIND
A10 9946
A5 9946
B15 CHRG
B28 SWEEP GATE
B30 CHBL
B29 CHCEN (L)
B25 CHCEN (H)
B26 ECL(L)
B27 FCL(H)
X1
A3 9099
A1 9093
A2 9932
A4 9962
C10 120µF
NC
NOTES:
1. FOR ASSY SEE 005854.
DEI SYSTEMS INC
SCHEMATIC (DISPLAY TIMING UNIT 7 BIT)
D
005855
SHEET 1 OF 1

APPENDIX A

IRASCOPE® ASCII CODE

LEGEND

INS	INSERT
DEL	DELETE
ERL	ERASE LINE
ADVL	ADVANCE LINE
RES	RESET
CLR	CLEAR
ADVS	ADVANCE SPACE
SND	SEND (TRANSMIT)
SP	SPACE
ADDRESS	STARTING ADDRESS FROM WHICH TRANSMISSION OR RECEPTION WILL TAKE PLACE

b7 b6 b5					0 0 0	0 0 1	0 1 0	0 1 1	1 0 0	1 0 1
b4	b3	b2	b1	column / row	0	1	2	3	4	5
0	0	0	0	0			SP	0		P
0	0	0	1	1			!	1	A	Q
0	0	1	0	2	ERL		"	2	B	R
0	0	1	1	3			#	3	C	S
0	1	0	0	4			$	4	D	T
0	1	0	1	5	CLR		%	5	E	U
0	1	1	0	6			&	6	F	V
0	1	1	1	7			'	7	G	W
1	0	0	0	8	INS	ADDRESS	(	8	H	X
1	0	0	1	9	DEL		)	9	I	Y
1	0	1	0	10			*	:	J	Z
1	0	1	1	11	ADVL		+	;	K	[
1	1	0	0	12	RES		,	<	L	\
1	1	0	1	13			-	=	M	]
1	1	1	0	14	ADVS		.	>	N	↑
1	1	1	1	15	SND		/	?	O	←

APPENDIX

IRASCOPE - INTERFACE

The Standard IRASCOPE interface is made through the output connector mounted in the rear of the unit.

The Data Transmission is asynchronous and consists of an eleven unit pattern at a 1200 baud rate. The pattern is the common teletype pattern consisting of a start element (always spacing), eight data elements and a double stop element (always marking).

Bits 1 through 7 of the data elements specify the data while bit 8 is reserved for optional data requirements. Bit 8 however, is utilized in the interface controlled address function.

TRANSMIT MODE

When data is prepared on the screen for transmission to external equipment, an EOM should be used at the end of the message. When the transmit key is depressed, transmission will start at the location of the Cursor and continue until the EOM is reached. All data between the initial location of the Cursor and the EOM will be transmitted. The Cursor will visibly move as the data is being transmitted and will stop at the EOM. The IRASCOPE automatically goes back to the receive mode after the EOM has been transmitted.

It should be noted that when transmit is initiated the IRASCOPE raises the "Request to Send" line. The transmission will take place only when the "Clear to Send" line is high; otherwise the Cursor will move only one position and stop.

RECEIVE MODE

The IRASCOPE is in the Receive Mode whenever it is on and not in the transmit mode. When data is transmitted to the IRASCOPE it will start at the location of the visible Cursor and continue to fill up memory locating and be displayed serially.

The visible cursor will not move when data is being placed on the display by external equipment. The only interface commands that can change the position of the visible cursor are the "RESET" and the "CLEAR" commands. At the receipt of an EOM, the interface counter will reset to the position of the visible cursor.

CONTROL WORD ADDRESS

While incoming data, nominally will start at the location of the visible cursor, other start locations can be specified by using the Control word address command. This command will move the interface counter to any location desired. The following data will start at the command location.

NOTE

Some care must be exercised when using this command, since the command location refers to the memory location and not necessarily to the display location. The program must be aware of the relation between memory locations and displayed locations.

The address of the two sets of locations initially are identical and will be incremented identically as long as no carriage return is used.

For example: Utilizing a 64 character line, the first character of the second line would be Location Number 73. This accounts for the six blank spaces necessitated by the retrace time. This would be the 73 location on the memory as well as on the display screen. If, however, a carriage return had been used in the tenth position of the first line, and assuming it was the first carriage return used, then the first position of the second line would display the data in memory location 17.

CONTROL WORDS

When Control words are transmitted to the IRASCOPE, care must be taken to insure that an even number of characters have preceded the control word. Further, a dummy character must be added after the control word. This dummy character will not be displayed. If the control word is sent after an odd number of characters, it will not be interpreted as a control word, but will be displayed as a character. The following dummy character, then, will also be displayed.

This rule is necessitated by the requirements of the Control word address Interface Command. In order to properly utilize this Command, a 16 bit word must be assembled in proper order. The in/out register is in fact a 16 bit register and normal 8 bit characters are alternately placed in the two, 8 bit halves. A control word, however, to be properly recognized must be placed in the first half of the register. The Control word address command requires not only that the command be recognized but that the address portion of the word be of sufficient length for proper addressing.

Figure 1 shows the structure of the Control Word Address Command.

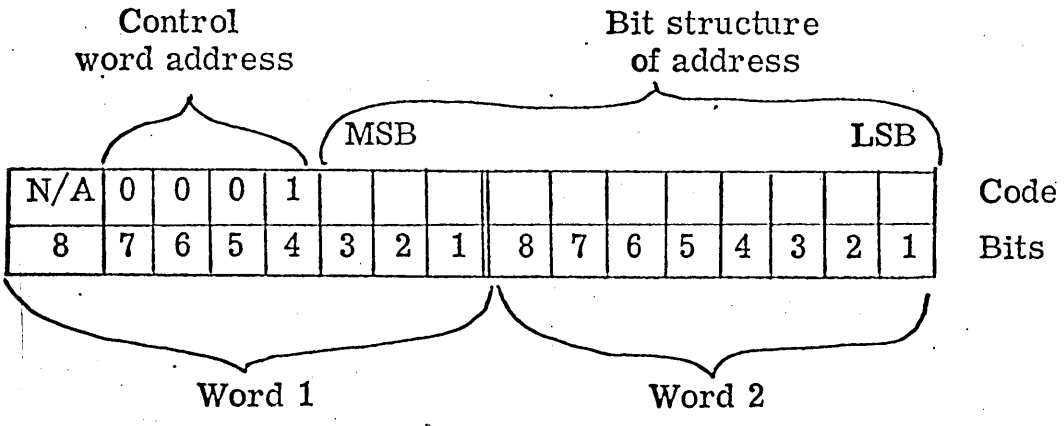

In summary;

a) Two words are required to properly utilize the control word address.

b) The first word must have been preceded by an even number of characters.

c) Bits 4, 5, 6, & 7 of the first word define the Command.

d) Bits 3, 2, & 1 of the first word are the most significant bits of the address.

e) The eight bits of the second word are the less significant bits of the address, with bit 1 being the least significant bit.

f) For other Control words rule a) and b) apply.

g) Any character can be used as a dummy for the other Control word.

SOME HELPFUL HINTS

1. If possible, terminate each line of data with a carriage return.

2. Carriage returns generated by the keyboard are automatically followed by 6 blanks to compensate for line retrace.

3. Carriage returns generated by in/out interface are not automatically followed by blanks. Therefore the program must supply these blanks (6).